ACWA POWER SOLARRESERVE REDSTONE SOLAR THERMAL POWER PLANT, ON THE REMAINING EXTENT OF THE FARM NO.469, HAY DISTRICT, NEAR POSTMASBURG IN THE NORTHERN CAPE PROVINCE

DEA REFERENCE: 12/12/20/2316
AND AS AMMENDED IN AM1 - 6
NEAS REFERENCE: DEA/EIA/0000765/2011

ENVIRONMENTAL MANAGEMENT PROGRAMME

09 DECEMBER 2015

REVISION 2

ENVIRONMENTAL MANAGEMENT PROGRAMME	
Project Name:	ACWA Power SolarReserve Redstone Solar Thermal Power Plant
Project company:	ACWA Power SolarReserve Redstone Solar Thermal Power Plant (RF) (Pty) Ltd Registration Number: 2014/287655/07
	Alistair D. Jessop Director, ACWA Power SolarReserve Redstone Solar Thermal Power Plant (RF) (Pty) Ltd Office XX07001, 90 Grayston Drive, Sandton, 2196
Contact Details	Terence Govender Tel: 011 582 6880 Fax: 086 645 4229 Cell: 083 499 0433 Email: Terence.Govender@solarreserve.com
Author of original EMPR	**WorleyParsons RSA (Pty) Ltd**
	JC Pretorius Environmental Assessment Practitioner Leanna Rautenbach Project Manager and Snr Environmental Assessment Practitioner
Author of Revision	**SolarReserve South Africa (Pty) Ltd**
	Leanna Rautenbach Director, Development – Africa Tel: 011 582 6880 Fax: 086 645 4229 Email: Leanna.Rautenbach@solarreserve.com
Independent Reviewer of EMPR	**Savannah Environmental (Pty) Ltd**
	Tebogo Mapinga Environmental Assessment Practitioner Tel: 011 656 3237 Fax 086 684 0547 Email: tebogo@savannahsa.com
	Karen Jodas (Pr.Sci.Nat) Environmental Assessment Practitioner Tel: 011 656 3237 Fax 086 684 0547 Email: karen@savannahsa.com

TABLE OF CONTENTS

Appendix List

List of Acronyms	
ARC-ISCW	Agricultural Research Council Institute for Soil, Climate and Water
ARI	Acute Respiratory Infections
BID	Background Information Document
CA	Competent Authority
CAGR	Compounded Annual Growth Rate
CAR	Co-ordinated Avifaunal Road-count
CEMPr	Construction Environmental Management Programme
CER	Contractor Environmental Representative
COPD	Chronic Obstructive Pulmonary Disease
CSP	Concentrated Solar Power
CWAC	Co-ordinated Waterbird Count
DAFF	Department of Agriculture, Forestry & Fisheries
DEA	Department of Environmental Affairs
DNI	Direct Normal Irradiance
DEA	Department Environmental Affairs
DENC	Department of Environment and Nature Conservation
DWS	Department of Water and Sanitation
EC	Electrical Conductivity
ECO	Environmental Control Officer
EDI	Electro-deionization
EHS	Environmental, Health and Safety
EIA	Environmental Impact Assessment
EIAR	Environmental Impact Assessment Report
EMPr	Environmental Management Programme
ERM	Environmental Resources Management
GDP	Gross Domestic Product
GHG	Green House Gas
GN	Government Notice

List of Acronyms	
GRU	Groundwater Resource Units
I&APs	Interested & Affected Parties
IDP	Integrated Development Plan
IPP	Independent Power Producer
MSDS	Material Safety Data Sheet
NEMA	National Environmental Management Act
NERSA	National Energy Regulator of South Africa
NGOs	Non-Governmental Organizations
NGDB	National Groundwater Database
OEMPr	Operational Environmental Management Programme
RO	Reverse Osmosis
SAHRA	South African Heritage Resources Agency
SANBI	South African Biodiversity Institute
SDF	Spatial Development Framework
ToR	Terms of Reference
WUL	Water Use License

Definitions and Terminology	
ACCELERATED SOIL EROSION	Soil erosion included by human activities and ultimately leading to irreversible degradation of the ecosystem and loss of ecosystem functionality
ALIEN SPECIES	(a) a species that is not an indigenous species; or (b) an indigenous species translocated or intended to be translocated to a place outside its natural distribution range by natural means of migration or dispersal without human intervention *(NEM: BA, Act No. 10 of 2004)*
ALTERNATIVES	In relation to a proposed activity, means different means of meeting general purpose and requirements of an activity, which may include alternatives to – (a) the property on which or location where it is proposed to undertake the activity; (b) the type of activity to be undertaken; (c) the design or layout of the activity; (d) the technology to be used in the activity; (e) the operational aspects of the activity; and and the option of not implementing the activity. *(NEMA EIA Regulations, 2014)*
ARCHAEOLOGICAL	(a) material remains resulting from human activity which are in a state of disuse and are in or on land and which are older than 100 years, including artefacts, human and hominid remains and artificial features and structures; (b) rock art, being any form of painting, engraving or other graphic representation on a fixed rock surface or loose rock or stone, which was executed by human agency and which is older than 100 years, including any area within 10m of such representation; (c) wrecks, being any vessel or aircraft, or any part thereof, which was wrecked in South Africa, whether on land, in the internal waters, the territorial waters or in the maritime culture zone of the Republic, as defined respectively in sections 3, 4 and 6 of the Maritime Zones Act, 1994 (Act No. 15 of 1994), and any cargo, debris or artefacts found or associated therewith, which is older than 60 years or which SAHRA considers to be worthy of conservation; and 6 5 10 15 20 25 (d) features, structures and artefacts associated with military history which are older than 75 years and the sites on which they are found; (National Heritage Resource's Act, Act No 25 of 1999)

Definitions and Terminology	
ASSESSMENT	The process of collecting, organising, analysing, interpreting and communicating information that is relevant to decision-making *(NEMA, Act No. 107 of 1998).*
BUILDING AND DEMOLITION WASTE:	Refers to waste, excluding hazardous waste, produced during the construction, alteration, repair or demolition of any structure, and includes rubble, earth, rock and wood displaced during that construction, alteration, repair or demolition *(NEM: WA, Act No. 59, 2008).*
BUND:	An artificial containment wall (embankment) designed to contain spillages of a hazardous nature such as chemicals and hydrocarbons.
BATCH PLANT:	A containment area centrally located where cement, water and other related aggregates are mixed to produce concrete and / or cement. The design of this area has to adhere to the specifications set out in the EMPr.
COMPETENT AUTHORITY:	In respect of a listed activity or specified activity, means the organ of state charged by this Act with evaluating the environmental impact of that activity and, where appropriate, with granting or refusing and environmental authorisation *(NEMA, Act No 107 of 1998).*
CONTRACTOR'S ENVIRONMENTAL REPRESENTATIVE (CER):	The CER is employed by the contractor to ensure the contractor complies with the environmental standards, specifications, as well as the conditions and stipulations contained within the Site Documentation. The CER is available on site at all times and has the experience and/or knowledge to deal with environmental issues.
CONTAMINATION:	The release/spillage of a substance into an environment where it is not normally found, which is detrimental to that environment, its ecosystems and to humans.
CONTAMINATED:	Means the presence in or under any land, site, buildings or structures of a substance or micro-organism above the concentration that is normally present in or under that land, which substance or micro-organism directly or indirectly affects or may affect the quality of soil or the environment adversely *(NEM: WA, Act No. 59, 2008).*
CONTRACTOR:	The individual and/or company that are responsible for the development and/or construction activities related to the proposed project. The Contractor is further responsible for the implementation of and compliance with the conditions and stipulations contained within the in Site Documentation.
CONSTRUCTION SITE CAMP:	The construction site camp refers to the designated area where the contractor's offices (temporary), and associated infrastructure will be located during the construction period of the proposed project.
CORRECTIVE (OR REMEDIAL) ACTION:	Reactive response required to address an action that is in conflict with the requirements of the Site Documentation. The need for corrective action may

Definitions and Terminology	
	be determined through monitoring, audits or management review.
DOMESTIC WASTE:	Means waste, excluding hazardous waste that emanates from premises that are used wholly or mainly for residential, educational, health care, sport or recreation purposes; *(NEM: WA, Act No. 59, 2008).*
DECOMMISSIONING	To take out of active service permanently or dismantle partly or wholly, or closure of a facility to the extent that it cannot be readily re-commissioned *(NEMA EIA Regulations, 2010, GNR 544)*.
ECOSYSTEM	A dynamic system of plant, animal and micro-organism communities and their non-living environment interacting as a functional unit *(NEMA, Act No 107 of 1998).*
ENDANGERED SPECIES	Any indigenous species listed as an endangered species in terms of section 56 (of the NEM:BA, Act No 10 of 2004)
ENDEMIC	An "endemic" is a species that grows in a particular area (is endemic to that region) and has a restricted distribution. It is only found in a particular place. Whether something is endemic or not depends on the geographical boundaries of the area in question and the area can be defined at different scales.
ENVIRONMENT:	Means the surrounding within which a human exist and that are made up of: • The land, water and atmosphere of the earth; • Micro-organism, plant and animal life; • Any part or combination of (i) and (ii) and the interrelationships among and between them; and • The physical, chemical aesthetical and cultural properties and conditions of the foregoing that influence human health and wellbeing *(NEMA Act 107 of 1998)*:
ENVIRONMENTAL ASSESSMENT PRACTITIONER	The individual responsible for the planning, management and coordination of environmental impact assessments, strategic environmental assessments, environmental management plan or any other appropriate environmental instruments introduced through regulations *(NEMA, Act No 107 of 1998).*
ENVIRONMENTAL AUTHORISATION	"environmental authorisation", when used in Chapter 5, means the authorisation by a competent authority of a listed activity or specified activity in terms of this Act, and includes a similar authorisation contemplated in a specific environmental management Act; *(NEMA, Act No 107 of 1998).*
ENVIRONMENTAL AUDIT:	Means work done to identify and evaluate compliance of the statement and the residual environmental impact of an existing activity, the effectiveness of mitigation measures and the functioning of monitoring mechanisms; *(Environmental Impact Assessment Act 6 of 2005 - Chapter 65:07)*
ENVIRONMENTAL AUDIT REPORT:	Means a report contemplated in regulation 34. *(NEMA EIA Regulations, GNR982, 2014)*

Definitions and Terminology	
ENVIRONMENTAL CONTROL OFFICER (ECO):	The ECO is an independently appointed duly qualified individual that is appointed to ensure the conditions and measures identified in the EMPr, Environmental Authorisation and all other relevant environmental permits are implemented and adequately monitored.
ENVIRONMENTAL IMPACT:	Change in an environment resulting from the effect of an activity on the environment, whether positive or negative. Impacts may be the direct consequence of an individual's or organisation's activities or may be indirectly caused by them *(DEAT, 1998)*.
ENVIRONMENTAL IMPACT ASSESSMENT (EIA):	Means the systematic process of identifying, assessing and reporting environmental impacts associated with an activity and includes the basic assessment report and or scoping and environmental impact assessment reports (*NEMA, EIA Regulations 982 of 2014)*.
ENVIRONMENTAL MANAGEMENT	Ensuring that environmental concerns are included in all stages of development, so that development is sustainable and does not exceed the carrying capacity of the environment.
ENVIRONMENTAL MANAGEMENT PROGRAMME	A programme required in terms of section 24 (of the NEMA, Act No. 107 of 1998) A detailed action plan prepared for the Project to ensure that the recommendations for minimising and reducing negative environmental impacts as well as enhancing positive environmental impacts are implemented during the Project's life-cycle. This EMPr focuses on the pre-construction, construction phase and operation & maintenance phase. [1]
EROSION	The loss of soil through the action of water, wind, ice or other agents, including the subsidence of soil *(Conservation of Agricultural Resource Act, Act No 43 of 1983)*
GENERAL WASTE:	Waste that does not pose an immediate hazard or threat to the environment or health, and includes: • domestic waste; • building and demolition waste; • Business waste: and • inert waste. *(NEM: WA, Act No. 59, 2008).*
HABITAT	A place where a species or ecological community naturally occurs *(NEM: BA*

[1] *Due to the nature of the technology the decommissioning phase is not addressed in detail, as it will be dependent on the legislation relevant to the facility and technology at the time of decommissioning.*

Definitions and Terminology	
	Act No. 10 of 2004)
HARM:	Means interference with the ecological systems of which the living organisms form part and in case of a living person includes harm, distress or annoyance to any of his senses or damage to his property. *(Waste Management Act, Act 15, 1998. CHAPTER 65:06).*
HAZARD:	Means a source of or exposure to danger *(NEMA, Act No. 107 of 1998).*
HAZARDOUS WASTE:	Any waste that contains organic or inorganic elements or compounds that may, owing to the inherent physical, chemical or toxicological characteristics of that waste, have a detrimental impact on health and the environment *(NEM: WA, Act No. 59, 2008).*
HERITAGE:	That which is inherited and forms part of the National Estate (historical places, objects, fossils as defined by the *National Heritage Resources Act 25 of 1999*).
HERITAGE RESOURCE	Any place or object of cultural significance. *(National Heritage Resource's Act, Act No 25 of 1999)*
HERITAGE SITE	A place declared to be a national heritage site by SAHRA or a place declared to be a provincial heritage site by a provincial heritage resources authority. *(National Heritage Resource's Act, Act No 25 of 1999)*
IMPACT:	A description of the potential effect or consequence of an aspect of the development on a specified component of the biophysical, social or economic environment within a defined time and space.
INTERESTED AND AFFECTED PARTY (I&AP):	Individuals and/or peer groups that are and/or maybe affected albeit positive or negative by the proposed activity. IAP's include authorities, local communities, environmental interest groups, and the general public.
INDIGENOUS	All biological organisms that occurred naturally within the study area prior to 1800.
INCIDENT:	An undesired event which may result in a significant environmental impact but can be managed through internal response.
MITIGATION:	Measures designed to avoid, reduce or remedy the proposed adverse impacts (*DEAT, 1998*).
MONITORING:	The repetitive and continued observation, measurement and evaluation of environmental criteria to follow changes over a period of time and to assess the efficiency of control measures *(DEAT, 1998).*
PRE-CONSTRUCTION:	Pre-construction entails planning, design and detailing of the development components prior to the commencement of the construction phase.
PREVENTATIVE ACTION:	A predetermined action to address potential problems before they develop into situations which would be contrary to the requirements of the EMPr. Preventative action is most often determined from the results of monitoring and

Definitions and Terminology	
	audits during management review.
PROJECT APPRAISAL:	The collection and evaluation of detailed information concerning a proposed project, usually to assess risk associated with it.
POLLUTION:	Means any contamination or change in the environment caused by: • Substances; • Radioactive or other waves; or • Noise, odours, dust or heat Emitted from any activity, including the storage or treatment of waste or substances, construction and the provision of services, whether engaged in by any person or organ of state, where that change has an adverse effect on human health or wellbeing or on the composition, resilience and productivity of natural or managed ecosystems, or on materials useful to people, or will have such an effect in the future (*NEMA, Act No. 107 of 1998)*.
RARE SPECIES	Taxa with small world populations that are not at present Endangered or Vulnerable, but are at risk as some unexpected threat could easily cause a critical decline. These taxa are usually localised within restricted geographical areas or habitats or are thinly scattered over a more extensive range. This category was termed Critically Rare by Hall and Veldhuis (1985) to distinguish it from the more generally used word "rare".
RED DATA SPECIES	Species listed in terms of the International Union for Conservation of Nature and Natural Resources (IUCN) Red List of Threatened Species, and/or in terms of the South African Red Data list. In terms of the South African Red Data list, species are classified as being extinct, endangered, vulnerable, rare, indeterminate, insufficiently known or not threatened (see other definitions within this glossary).
REHABILITATION:	Return of a disturbed area to a state which approximates the state (wherever possible) which it was before disruption.
SITE ENGINEER (SE):	The SE is the Project Proponents' representative onsite. The SE authority to issue instructions and oversees the operations of the contractor. Upon request from the CER/ECO the SE has the mandate whereby, in emergency circumstances, he may override the instructions of the contractor.
SOLID WASTE:	All waste, including construction debris, chemical waste, excess cement/concrete, wrapping material, timber, tins and cans, drums, wire, nails, domestic , dead organic waste, asphalt products *(City of Cape Town: Standard Environmental Specification Version 6:2007)*.

Definitions and Terminology	
PROJECT:	The ACWA Power SolarReserve Redstone Solar Thermal Power Plant is a Concentrated Solar Power (CSP) Central Receiver Tower plant, with molten salt as heat transfer fluid and storage medium that has a generation capacity of up to 100MW.
PROJECT SITE	The remaining extent of the Farm No 469, Hay District (registration), Tsantsabane Local Municipality, in the ZF Mgcawu District, in the Northern Cape Province.
SITE DOCUMENTATION:	In this document, "*Site Documentation"* refers to all relevant documentation that pertains to the licensing, development, construction, operation and management of the Project Site: • All permits, licenses and authorisations; • Mitigation strategies; • Method statements and standard operating procedures; • Site Operation, Management and Maintenance Plans; • Site Design Documentation and final site layout plan; • Environmental Management Programme; and • Written instructions from the CA.
WASTE	Any substance, whether or not that substance can be reduced, re-used, recycled and recovered – (a) that is surplus, unwanted, rejected, discarded, abandoned or disposed of; (b) which the generator has no further use of for (he purposes of production; (c) that must be treated or disposed of; or (d) that is identified as a waste by the Minister by notice in the Gazette, and includes waste generated by the mining, medical or other sector, but— (i) a by-product is not considered waste; and (ii) any portion of waste, once re-used, recycled and recovered, ceases to be waste; *(NEM: WA, Act 59 of 2008)*
WATER POLLUTION:	The National Water Act, 36 of 1998 defined water pollution to be the direct or indirect alteration of the physical, chemical or biological properties of a water resource so as to make it – less fit for any beneficial purpose for which it may reasonably be expected to be used; or harmful or potentially harmful (aa) to the welfare, health or safety of human beings; (bb) to any aquatic or non-aquatic organisms; (cc) to the resource quality; or (dd) to property.

Definitions and Terminology	
WATERCOURSE:	(a) a river or spring; (b) a natural channel or depression in which water flows regularly or intermittently; (c) a wetland, lake or dam into which, or from which, water flows; and/or (d) d) any collection of water which the Minister may, by notice in the Gazette, declare to be a watercourse as defined in the *National Water Act, Act No. 36 of 1998* and a reference to a watercourse includes, where relevant, its bed and banks.
WETLAND:	Land which is transitional between terrestrial and aquatic systems where the water table is usually at or near the surface, or the land is periodically covered with shallow water, and which land in normal circumstances supports or would support vegetation typically adapted to life in saturated soil.

1 Introduction

This Construction Environmental Management Programme (CEMPr) and Operational Environmental Management Programme (OEMPr) has been compiled for the ACWA Power SolarReserve Redstone Solar Thermal Power Plant (the "Project") as per the Environmental Authorisation (GNR 543, 544, 546 and 547 of 2010) (refer to Appendix A for a copy of the EA and its amendments). The Project, situated on the Remaining Extent of the Farm No 469, involves the construction and operation of a 100 MW Concentrated Solar Power (CSP) Plant that uses a central receiver technology with molten salts storage and its associated infrastructure. This EMPr also provides the final site layout for the project with its associated infrastructure.

The Environmental Management Programme (EMPr) has been developed on the basis of the findings of the EIA, and must be implemented to protect on-site and off-site features[2] through the management of construction, operation and decommissioning activities the aim is to minimise potential impacts on the environment. This EMPr is applicable to all of the Projects employees and contractors working on the pre-construction, construction, and operation & maintenance phases of the Project.

The original EMPr was compiled by WPRSA, then amendment by SolarReserve SA and reviewed by an Independent EAP in order to ensure full compliance with all conditions pertained in the EA. It also incorporates all relevant permits conditions and includes the mitigation measures as identified during the EIA phase of the Project. It also confirms the final site layout plan adheres to the requirements set out in the EMPr and relevant permits.

The changes made within this document are underlined for ease of reference.

[2] Off site is defined in the terms of the approved Environmental Impact Assessment and relates to possible impacts that may be generated outside the project site boundary which may include migratory routes etc.

2 Project Overview

The Project Company will construct and operate a 100 MW Concentrated Solar Power (CSP) Plant, known as the ACWA Power SolarReserve Redstone Solar Power Thermal Plant. The Project will be situated on the Remaining Extent of the Farm No. 469, located to the east of Postmasburg in the Northern Cape Province. The Project Site location is illustrated in **Figure 1.**

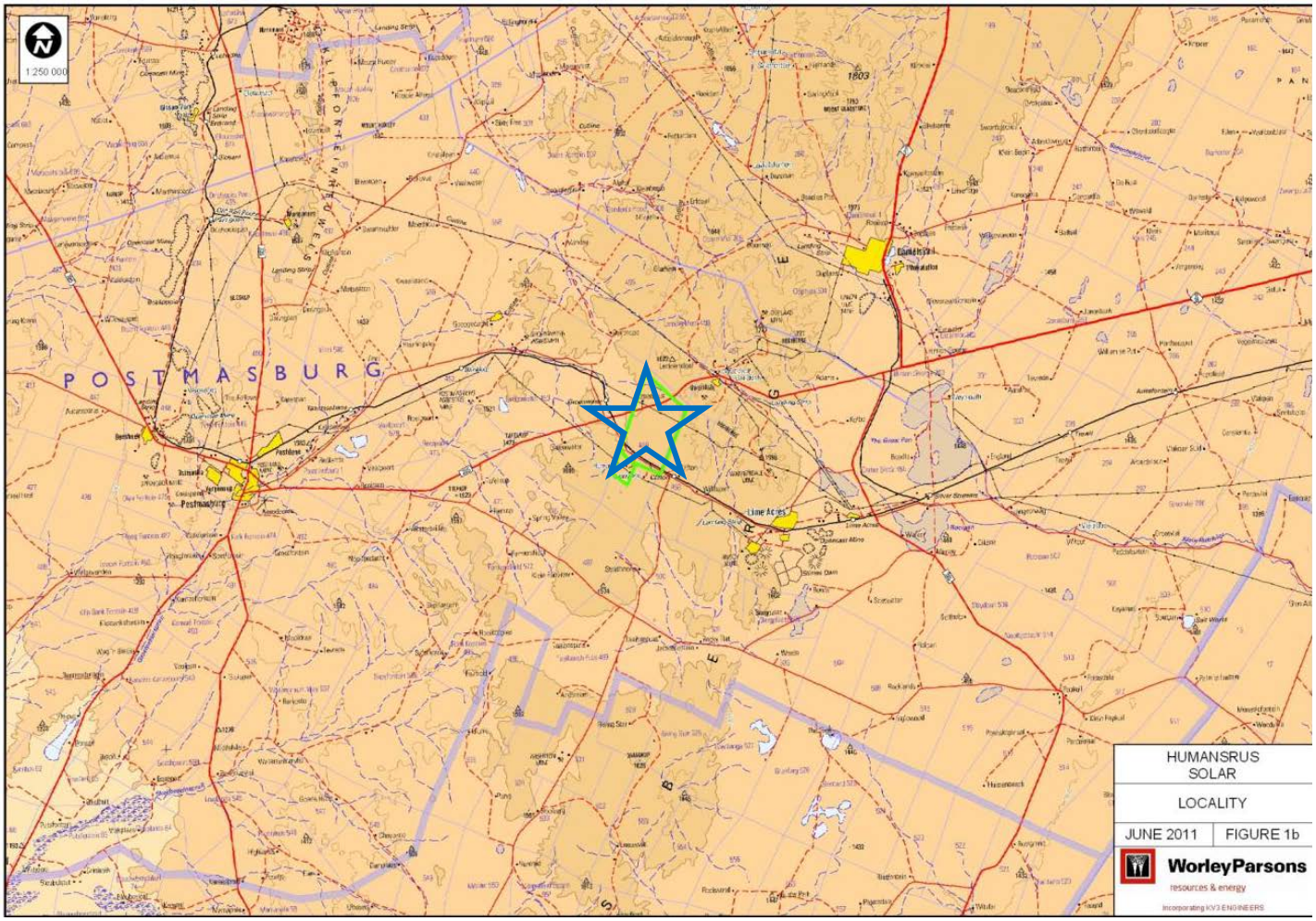

Figure 1: Locality map of the proposed ACWA Power SolarReserve Redstone Solar Power Thermal Plant

The Project will use the CSP Central Receiver Tower technology, with molten salts as heat transfer fluid and storage medium. The infrastructure for the Project includes but is not limited to *inter alia:*

- A collector field comprising of approximately 800 hectare surface area;
- An ~ 250 meter tall tower and an additional thermal receiver;

- A thermal to electric power block with an approximately 115 MW reheat and multiple extractions high temperature subcritical steam turbine and generator;
- Two molten salt thermal storage tanks;
- An air-cooled condenser for the steam cycle in order to minimise the consumption of water;
- Water reticulation and purification works;
- Sewer reticulation and treatment works;
- An evaporation pond consisting of three (3) compartments with a combined area of approximately 8.0 ha, to completely contain all rejected water from the water treatment system and the steam cycle;
- Roads and stormwater infrastructure;
- Diesel auxiliary burners for start-up;
- Emergency diesel generators;
- Grid Connection infrastructure, including substation and switchyards and associated structures;
- Construction camp - accommodation and associated facilities for approximately 600 people;
- Administrative and office buildings;
- Visitors centre;
- Equipment and materials lay down area;
- Assembly Plant;
- Concrete batching plant;
- Vehicle workshops and wash bays;
- Fuel storage area;
- Temporary general waste storage facility; and
- Hazardous material storage facility.

2.1 Environmental Impact Assessment Findings

In terms of the findings of the Final EIAr, various potential pre-construction (planning), construction and operational & maintenance impacts were identified which include:

- Potential impacts on heritage resources;
- Potential impact on surface water features;
- Potential impact on sensitive ecosystems;
- Potential impact of soil degradation and erosion;
- Potential impact on fauna, especially avifauna;
- Disturbance of the visual character of the region, and
- Socio economic and nuisance impacts.

Areas of diverse environmental sensitivity were identified and ranked according to a pre-determined classification system as part of the Environmental Impact Assessment (EIA) Process. The purpose of a sensitivity analysis was to integrate the findings of the various specialist studies into a single matrix on the basis of standardised impact rating.

The environmental attributes (specialist areas) that were included in the sensitivity assessment included:

- Ecology;
- Wetlands;
- Surface Hydrology;
- Soil Sensitivity; and
- Visual Quality.

The Project layout was overlain on the sensitivity map, which provided a clear indication of areas that are suitable for development and which areas should be avoided and as such also presents the relevant mitigation plans. This rendering informed the decision making with regards to the evaluation of the site layouts and the optimal location for infrastructure identifying areas of in need of conservation and protection as well as areas well suited for development.

From the sensitivity analysis and as shown in Appendix B, it is evident that the CSP footprint is predominantly within areas of very low to moderate sensitivities, except for the hilly terrain in the north-east where high sensitivities occur. The result of this analysis shows that the project development footprint will avoid the majority of all highly sensitive features in order to avoid to the maximum any major environmental impacts and the mitigation plan is presented below.

An ecology walkthrough survey was undertaken as per the conditions of the EA and the relevant permits obtained for those protected species affected by the Project development footprint, largely

Olea europea subsp. africana as well as lesser numbers of *Acacia erioloba* and *Acacia haematoxylon.* This was used to generate the Final Site layout.

This layout generated by the sensitivity mapping was used as the baseline environmental data which informed the final site layout plan as included in Appendix B – Final Site Layout Plan. The findings from the sensitivity mapping ensured the development infrastructure is optimally placed, both from an environmental and then technical perspective.

2.2 Final Layout

As per the conditions stipulated in the EA (Condition 18.2), a final site layout plan is presented in Appendix B. The layout provides the following renderings for the Project Layout:

- the final site layout.
- the final site layout plan overlain on the sensitivity map.
  - Blow up of the power block infrastructure;
  - Blow up of the site access infrastructure; and
  - Blow up of evaporation pond infrastructure.

This site layout depicts the Project infrastructure and environmental sensitive areas:

- Heliostat field;
- Power block with tower (central receiver);
- Evaporation ponds and associated water and waste water pipelines;
- Access point & associated on site roads;
- Substation and point of interconnection;
- Laydown and assembly areas and construction camp site;
- Man-camp; and
- Environmental features:
  - Heritage finds.
  - Surface water features.
  - Ecologically sensitive areas.
  - No-go areas.

This layout has been overlaid on the environmental sensitivity map (indicating surface water features, ecological sensitivities, location of heritage sites etc.).

Throughout the period of construction, the EPC Contractor shall restrict all activities to within the designated areas on the approved construction final site layout plan. Any relaxation or modification of the construction layout plan is to be approved by the ECO and in accordance to the NEMA EIA Regulations as promulgated in 2014.

3 Regulatory Framework

This section provides a brief overview of both the National and International Regulatory requirements that must be met by the Project. The EMPr has been informed by the requirements set out in the various legislative documents below in order to ensure that best practice is implemented throughout all the Project's life stages. The Project is furthermore represented by an international team of lenders, thus making the inclusion of international conventions and agreements, as well as the IFC Standards and the Equator Principles essential. The legal framework presented will be the basis on which the legal register is founded and will be kept on record in the Site Documentation at all times.

It is the responsibility of the Project Company to ensure compliance with the conditions and environmental consents by any person working for or on their behalf, including but not limited to, an agent, contractor, sub-contractor, employee or person rendering a service to the holder of the authorisation.

3.1 South African legislation

3.1.1 National Environmental Management Act, Act No 107 of 1998

In terms of the National Environmental Management Act, 1998 (Act No. 107 of 1998) (NEMA), as amended and the EIA Regulations, 2010, an application for environmental authorisation for certain listed activities was submitted to the Competent Authority (CA) for the Project.

The EIA regulations, GN R.543, GN R.544, GN R.545 and GN R.546, promulgated in terms of Section 24 of the NEMA and subsequent amendments lists those activities triggered by the Project and required to be authorised by the Competent Authority (through the undertaking of a detailed EIA (Scoping and Impact Assessment phases)).

3.1.2 National Environmental Management: Waste Act, Act No 59 of 2008

One of the main objectives of the National Environmental Management: Waste Act, 2008 (Act 59 of 2008) (NEM: WA) is to reform the law regulating waste management in order to protect health and the environment by providing reasonable measures for the prevention of pollution and ecological degradation and for securing ecologically sustainable development and to provide for:

- National norms and standards for regulating the management of waste by all spheres of government;
- Specific waste management measures;
- The licensing and control of waste management activities;
- The remediation of contaminated land; to provide for the national waste information system; and
- Compliance and enforcement;

The nature of the Project required that an integrated Waste Licensing and Environmental Impact Assessment process was undertaken for the authorisation of the Project.

3.1.3 National Water Act, Act No. 36 of 1998

The National Water Act, Act No. 36 of 1998 (NWA) is the primary legislation regulating both the use of water and the pollution of water resources. It is applied and enforced by the Department of Water and Sanitation (DWS).

Section 21 of the NWA lists the water uses for which a water use licence (WUL) is required. In terms of the NWA, water uses include the following activities:

(a) Taking water from a water resource;

(b) Storing water;

(c) Impeding or diverting the flow of water in a watercourse;

(d) Engaging in a stream flow reduction activity contemplated in section 36;

(e) Engaging in a controlled activity identified as such in section 37(1) or declared under section 38(1);

(f) Discharging waste or water containing waste into a water resource through a pipe, canal, sewer, sea outfall or other conduit;

(g) Disposing of waste in a manner which may detrimentally impact on a water resource;

(h) Disposing in any manner of water which contains waste from or which has been heated in, any industrial or power generation process;

(i) Altering the bed, banks, course or characteristics of a watercourse:

(j) Removing, discharging or disposing of water found underground if it is necessary for the efficient continuation of an activity or for the safety of people; and

(k) Using water for recreational purposes.

The Project Company has initiated the process of application for this license in accordance with the water requirements of the Project.

3.1.4 National Heritage Resources Act, Act No. 25 of 1999

The National Heritage Resources Act, 1999 governs the management of heritage resources which are of cultural significance. The South African Heritage Resources Agency is the national body responsible for the protection of South Africa's cultural heritage resources.

3.1.5 Electricity Regulation Act, Act No. 4 of 2006 as amended by the Electricity Regulation Amendment Act No. 28 of 2007

This regulation regulates the use and generation of electricity.

3.1.6 Other policies, plans and guideline documents

Other policies, municipal plans and guideline documents that are relevant to the project are listed below:

- Guidelines published in terms of the NEMA EIA Regulations;
- National Environmental Management Biodiversity Act (NEMBA) (Act 10 of 2004);
- Electricity Act (Act 41 of 1987);
- Promotion of Administrative Justice Act (Act 2 of 2000);
- Civil Aviation Act (Act 13 of 2009) and Civil Aviation Regulations (CAR) of 1997;
- Civil Aviation Authority Act (Act 40 of 1998);
- White Paper on Renewable Energy (2003);
- Integrated Resource Plan for South Africa (2010);
- Conservation of Agricultural Resources Act (Act No. 43 of 1983);
- Astronomy Geographic Advantage Act (Act 21 of 2007);
- Land Use Planning Ordinance (Ordinance 15 of 1985); and
- Subdivision of Agricultural Land Act(Act No. 70 of 1970)
- Mineral and Petroleum Resource Development Act (Act No 28 of 2002)
- National Environmental Management: Air Quality Act (Act No 39 of 2004)
- National Forests Act(Act No 84 of 1998)
- Water Services Act (Act No 108 of 1997)
- National Road Traffic Act (Act No. 93 of 1996).

3.2 International Conventions and Agreements

Relevant international environmental and social conventions and agreements to which South Africa is a party are presented below:

- South African Status Convention on Biological Diversity (29 December 1993): Develop strategies, plans or programs for conservation and sustainable use of biological diversity or adapt for this purpose existing strategies, plans or programs which shall reflect, inter alia, the measures set out in this Convention

- Convention on Wetlands of International Importance (Ramsar) (21 December 1975): To stem the progressive encroachment and loss of wetlands now and in the future
- United Nations Framework Convention on Climate Change - Kyoto Protocol (23 February 2005): To further reduce greenhouse gas emissions by enhancing the national programs of developed countries aimed at this goal and by establishing percentage reduction targets for the developed countries and through the clean development mechanism (CDM) (where developed countries can invest in developing country clean technology to offset emissions)
- Montreal Protocol on Substances That Deplete the Ozone Layer (1 January 1989): Calculated levels of consumption and production of CFCs must not exceed the stipulated thresholds
- United Nations Convention to Combat Desertification (26 December 1996): To combat desertification and mitigate the effects of drought through national action programs
- United Nations Framework Convention on Climate Change (21 March 1994): Protection of the climate system: Operations must protect the climate system by controlling greenhouse gases not controlled by the Montreal Protocol, which cause climate change through anthropogenic interference with the climate system
- Stockholm Convention on Persistent Organic Pollutants (POPs) (17 May 2004): This convention seeks to ban the production and use of persistent organic chemicals but allow the use of some of these banned substances, such as DDT, for vector control.
- The Fourth ACP-EEC Convention 15 December 1989 (Lome): Control of hazardous and radioactive waste: the operation must be aware that international law emphasizes strict control of hazardous waste and compliance with domestic legislation in this regard. It also seeks to prohibit imports and exports of such substances
- Convention concerning the Protection of the World Cultural and Natural Heritage 1972 (Paris): Ensuring the identification, protection, conservation, presentation and transmission to future generations of the cultural and natural heritage (Ratification)
- Rotterdam Convention on the Prior Informed Consent Procedure for Certain Hazardous Chemicals and Pesticides in International Trade (24 February 2004): Promote shared responsibility and cooperative efforts among Parties in the international trade of certain hazardous chemicals in order to protect human health and the environment from potential harm

3.3 International Standards

3.3.1 International Finance Corporation Performance Standards

ACWA Power SolarReserve is committed to complying with the International Finance Corporation (IFC) Performance Standards (PS) on social and environmental sustainability. These were developed by the IFC and were last updated on 1st January 2012. The overall objectives of the IFC PS are:

- To fight poverty;
- To do no harm to people or the environment;

- To fight climate change by promoting low carbon development;
- To respect human rights;
- To promote gender equity;
- To provide information prior to project development, free of charge and free of external manipulation;
- To collaborate with the project developer to achieve the PS;
- To provide advisory services; and
- To notify countries of any Trans-boundary impacts as a result of a Project.

The PS comprise of eight performance standards namely:

- Performance Standard 1: Assessment and Management of Environmental and Social Risks and Impacts;
- Performance Standard 2: Labour and Working Conditions;
- Performance Standard 3: Resource Efficiency and Pollution Prevention;
- Performance Standard 4: Community Health, Safety and Security;
- Performance Standard 5: Land Acquisition and Involuntary Resettlement;
- Performance Standard 6: Biodiversity Conservation and Sustainable Management of Living Natural Resources;
- Performance Standard 7: Indigenous Peoples; and
- Performance Standard 8: Cultural Heritage.

Performance Standard 1 establishes the importance of:

(i) integrated assessment to identify the social and environmental impacts, risks, and opportunities of projects;

(ii) effective community engagement through disclosure of project-related information and consultation with local communities on matters that directly affect them; and

(iii) the management of social and environmental performance throughout the life of a project through an effective Environmental and Social Management System (ESMS).

PS 1 is the overarching standard to which all the other standards relate. The ESMS should be designed to incorporate the aspects of PS 2 to 8 as applicable.

PS 2 through 8 establish specific requirements to avoid, reduce, mitigate or compensate for impacts on people and the environment, and to improve conditions where appropriate. While all relevant social and environmental risks and potential impacts should be considered as part of the

assessment, PS 2 through 8 describe potential social and environmental impacts that require particular attention in emerging markets. Where social or environmental impacts are anticipated, the developer is required to manage them through its ESMS consistent with PS 1.

3.3.2 Equator Principles

The Equator Principles (EPs) is a credit risk management framework for determining, assessing and managing environmental and social risk in Project Finance transactions. Project Finance is often used to fund the development and construction of major infrastructure and industrial projects.

The EPs are adopted by financial institutions and are applied where total project capital costs exceed US$10 million. The EPs are primarily intended to provide a minimum standard for due diligence to support responsible risk decision-making. The EPs are based on the IFC PS 2012 and on the World Bank Group Environmental, Health and Safety Guidelines (EHS Guidelines).

The Equator Principles Financial Institutions (EPFIs) have consequently adopted these Principles in order to ensure that the projects they finance are developed in a manner that is socially responsible and reflect sound environmental management practices.

EPFIs will only provide loans to projects that conform to the following principles:

- Principle 1: Review and Categorisation;
- Principle 2: Social and Environmental Assessment;
- Principle 3: Applicable Social and Environmental Standards;
- Principle 4: Action plan and Management;
- Principle 5: Consultation and Disclosure;
- Principle 6: Grievance Mechanism;
- Principle 7: Independent review;
- Principle 8: Covenants;
- Principle 9: Independent Monitoring and Reporting; and
- Principle 10: EPFI Reporting.

3.3.3 The World Bank Group Environmental Health and Safety (EHS) Guidelines

The EHS Guidelines (World Bank Group, 2007) are technical reference documents with general and industry specific (i.e. mining) examples of Good International Industry Practice (GIIP). Reference to the EHS guidelines is required under IFC PS 3.

The EHS Guidelines contain the performance levels and measures normally acceptable to the IFC and are generally considered to be achievable in new facilities at reasonable cost. When host

country regulations differ from the levels and measures presented in the EHS Guidelines, Projects are expected to achieve whichever standard is more stringent.

3.4 Environmental Consents and Permit Requirements

The table below summarises the aforementioned legislation, illustrating the legal requirement pertaining to the Project activity, stating if a permit/consent is required as well as the status of the permit/consent requirement.

Table 1: Environmental Permit Requirements

Legislation	Requirements	Relevant Authority	Compliance/Permit Requirements
National Environmental Management Act (Act No 107 of 1998)	In terms of the GN Regulations 543, 544, 545 and 546 promulgated on 18 June 2010 – a detailed EIA (and Scoping) was undertaken for the Project, to assess the impact of activities associated with the Project.	DEA	Environmental Authorisation - An Integrated EA was issued on 06 August 2012.
National Environmental Management: Waste Act, 2008 (Act No. 59 of 2008)			WML - An Integrated EA was issued on 06 August 2012.
Environment Conservation Act, Act No. 73 of 1989	National Noise Control Regulations (GN 154 promulgated 10 January 1992)	DEA	No permit required. - The noise impacts assessed and proposed by the Project is not expected to pose a significant impact to the receiving environment.
National Water Act (Act No 36 of 1998)	Water uses as stipulated in Section 21 of the NWA require licensing.	DWS	A water use license (WUL) has been applied for by the Project Company in accordance with the NWA.
Minerals and Petroleum Resources Development Act (Act No 28 of 2002)	Section 53 Surface Right Approval is required if the Project Site is to be used contrary to the provisions of the MPRDA. Approval is needed from the Minister to ensure mineral resources are not sterilised.	DMR	A Section 53 –Surface right approval was received from the DMR for the Project Site.
National Environmental Management: Air Quality Act (Act No 39 of 2004)	Measures in respect of dust control as defined in Seciton 32 and the National Dust Control Regulations, dated February 2014. No regulations with regards to measures to control dust has yet been promulgated.		No permit required.
National Heritage Resources Act (Act No 25 of 1999)	Section 35 provides for the protection of all archaeological and palaeontological sites and meteorites.	SAHRA	A HIA was undertaken as part of the EIA process to identify and classify possible heritage sites/finds. - A letter of final comment was received from

Legislation	Requirements	Relevant Authority	Compliance/Permit Requirements
	Section 36 provides for the conservation of and care of all cemeteries and graves. Section 37 provides for the activities that require notification of heritage resources authorities in the event of being unearthed.		SAHRA regarding the finds. A mitigation permit is recommended for PGS06, however the final site layout excludes this area as a no-go area in order to conserve this site.
National Environmental Management: Biodiversity Act (Act No 10 of 2004)	Provides of the protection and conservation of threatened and protected species in terms of Section 56 of Government Gazette 29657. - Government notices 150, 151 and 152 have been published.	DEA NC DENC	Several species of concern were identified during the Ecological Walkdown assessment that require permitting. - A Flora Harvesting Permit has been issued for the Project Site.
National Forests Act (Act No. 84 of 1998)	Under the provisions of the Act, "no person may cut, damage, disturb, destroy or remove any protected tree or collect, remove, transport, export, purchase, sell or donate or in any other manner acquire or dispose of a protected tree, unless licensed.	DAFF	Several protected species were identified during the Ecological Walkdown assessment that require permitting. - A Flora Harvesting License has been issued for the Project Site.
Conservation of Agricultural Resources Act (Act No 43 of 1983)	The Act makes provisions for the prohibition of the spreading of weeds in Section 5. - Requirements and methods to implement measures to control the spread of these species are provided for in Regulation 15 of GN 1048 and Regulation 58 of GN 37885 of the NEM: BA	DAFF	No permit required. - Soil and erosion prevention strategies will be applicable for the Project Site. - An Alien Invasive Species Management Plan is included in the EMPr in order to address this.
Subdivision of Agricultural Land Act (Act No 70 of 1970)	Act provides for the subdivision of or registration of a long term lease over any property that is zoned as agriculture.	DAFF	A long term lease registration permit has been obtained for the Project.
Northern Cape Ordinance	The Act provides for the rezoning of a property	Tsantsabane	Rezoning permit was obtained from the local

Legislation	Requirements	Relevant Authority	Compliance/Permit Requirements
for land use in terms of the Northern Cape Provinces Development and Planning Act, Act No 7 of 1998	from one specific use to another.	LM	municipality for the Project Site to include "Special Purpose Use – Renewable energy".
National Veld Fires and Forests Act, Act No 101 of 1998	The Act requires the Project Company to ensure fire protection measures are adequate as to reduce the spread of fire, whilst not causing erosion. The act also makes provision for the establishment and management of veld fire prevention and fire protection associations.		No Permit required. The Act will find application during operational and construction phases, and implementation measures has been included in this EMPr.
National Road Traffic Act (Act No 93 of 1996)	The Act makes provisions for vehicles that do not comply with the provisions of the Road Traffic Act and Regulations in terms of permissible dimensions and/or loads are classified as abnormal vehicles. To operate on public roads, abnormal vehicles may be issued with a special permit upon payment of certain fees and charges.	SANRAL DR&PW	Road access permit has been obtained for the access road to be constructed for the Project. Additional permits that will need to be obtained by the Contractor: - Abnormal load permit will be required for the transport of equipment and material as well as for the use of certain routes.
Astronomic Geographic Advantage Act, Act No 21 of 2007	The AGA makes provision for the protection of areas within South Africa that are suited for optical and radio astronomy purposes. The Act declares a core area and various advantage areas that require protection.	SKA	No Permit required. The whole of the Northern Cape Province has been declared as an astronomy advantage area for radio astronomy purposes. - A letter of no contest has been received from the SKA with respect to the Project.
Civil Aviation Act of 2009 (Act No. 13 of 2009)	Any communications structure, building or other structure, whether temporary or permanent, which has the potential to endanger aviation in navigable airspace, or has the potential to interfere with the operation of navigation or surveillance systems or Instrument Landing Systems, including meteorological systems for aeronautical purposes, is considered an obstacle and shall be submitted to the Commissioner for Civil Aviation for evaluation (refer SA-CAR Part 139.01.33)	CAA	An obstacle permit has been obtained for all infrastructure that will intrude into airspace. An additional permit will be required for the erecting of cranes on site during construction – this permit forms part of the EPC Contractor's responsibility as it is a temporary permit.

4 Environmental Management Programme

The EMPr is based on the National Environmental Management Act, Act No. 107 of 1998, (NEMA) (as amended). It provides the action plan with respect to the 'Duty of Care' on all parties who cause, or may in future cause pollution or degradation to the environment, as per of Section 28(1) of NEMA. This EMPr has been compiled in accordance with Section 33 of the EIA Regulations (promulgated in 2010) and will be reflects the specific requirements listed in the authorisations issued for the Project. The EMPr provides all Constrictors and subcontractors with clear and concise guidelines and actions for implementing the management and monitoring measures established in the permitting process and help achieve environmental policy goals, as well as to ensure continuous improvement of environmental performance, reducing negative impacts and enhancing positive effects during the construction and operation of the facility.

The EMPr has been developed as a set of environmental specifications (i.e. principles of environmental management), which are appropriately contextualised to provide clear guidance in terms of the on-site implementation of these specifications (i.e. on-site contextualisation is provided through the inclusion of various monitoring and implementation tools).

This EMPr has the following objectives:

- Identify entities responsible for the implementation of the measures and outline functions and responsibilities.
- Provide an outline of the legal requirements of the Project activities to ensure compliance with regulatory authority stipulations and guidelines which may be local, provincial, national and/or international.
- Ensure that all the phases of the Project do not result in undue or reasonably avoidable adverse environmental impacts, and ensure that any potential environmental benefits are enhanced.
- To outline mitigation measures and environmental specifications which are required to be implemented for all phases of the Project in order to minimise the extent of environmental impacts, and to manage environmental impacts associated with the Project.
- Propose mechanisms and frequency for monitoring compliance, and preventing long-term or permanent environmental degradation.
- Facilitate appropriate and proactive responses to unforeseen events or changes in project implementation that was not considered in the EIA process.
- To establish a method of monitoring and auditing environmental management practices during all phases of development.
- Propose mechanisms for monitoring compliance with the EMPr and reporting thereon;

The EMPr specifies all the potential environmental impacts, control and mitigation measures, performance criteria and relevant reporting and monitoring procedures. The EMPr forms part of the construction contractual agreements by means of inclusion in the environmental specifications that form part of the contract between the Project Company and the Contractor.

4.1 Structure of the EMPr

This EMPr provides mitigation and management measures for four (4) main phases in the Project's life cycle.

Table 2: Structure or the EMPr

Stage 1:	Pre-Construction	This section will provide guidelines on pre-construction activities including site establishment and clearance; environmental induction and training and awareness; site access and health and safety.
Stage 2:	Construction	This section of the EMPr will provide guidelines on construction methods and considerations to be included for the Project. This section will furthermore include management principles for the rehabilitation of construction specific area prior to the commencement of Operations.
Stage 3:	Operation & Maintenance	This section of the EMPr provides management principles for the Operations & Maintenance phase of the Project. This will include best practice, procedures and responsibilities as required for various associated activities.
Stage 4	Decommissioning	This section of the EMPR defines the process of decommissioning for the Project. Due to the nature of the Facility it must be noted that decommissioning activities will need to be undertaken in accordance with the relevant legislation applicable at that time, which may require this section of the EMPr to be revisited and amended.

4.2 Contractual Obligation

This EMPr will be included in all contract documentation associated with the Project. The content of this EMPr is relevant and binding on the activities associated with the pre-construction, construction and operation & maintenance of the Project.

5 Roles and Responsibility

This section of the EMPR aims to identify and allocate responsibility to the various persons for ensuring environmental compliance is achieved. This section of the document will delineate the function and responsibility of each designation that plays a role in terms of managing the environment.

This will be undertaken in collaboration with appropriate and relevant third parties, to establish, maintain and strengthen the organisational structure that will define the roles, responsibilities and authority in the implementation of the ESMS, during the Operational Phase (Condition 5.9.1).

5.1 Project Company & Project Manager (PM)

The Project Company will appoint a PM, who will be responsible for overall management of the Project, overseeing all tasks proposed during construction and operations & maintenance.

The Project Company will notify the Competent Authority (CA), of the appointment of the Environmental Control Officer (ECO) and the start date proposed for the commencement of construction activities. This task will be undertaken by the Project Manager.

Tasks that are allocated to the PM will include but is not limited to

- Ensuring the contractors are aware of the conditions in the EA and the EMPr;
- Ensuring that the prospective Contractors adequately provide for the provisions of the EMPr
- Appointing an independent suitable qualified ECO to objectively monitor implementation of relevant environmental legislation and requirements of the EMPr for the project.
- Support and provide mandate to enable the ECO and Contractor Environmental Representative (CER) to perform their responsibilities.
- Ensuring that the ECO is integrated as part of the project team and as access to the project site.
- Establishing and maintaining proactive communications with the Contractor and ECO.
- Undertaking periodic site visits and inspections to ensure that the environmental requirements are implemented.
- Giving instructions on any procedures and corrective actions
- Action the mitigation measures as proposed by the ECO from time to time.

5.2 Environmental Manager (EM)

In addition to the ECO, the Project Company will appoint its own Environmental Manager (EM). The EM will be the primary person responsible for overseeing the monitoring and implementation EMPr provisions and all conditions contained within the Site Documentation.

The EM will report directly to the PM and will oversee the permitting process during the construction and operation & maintenance phases, ultimately ensuring that the respective Contractors' are in the possession of the necessary authorisations/permits/licenses as required throughout the Construction and Operational phases of the Project. This action will be guided by the stipulations in the Engineering, Procurement and Construction (EPC) and Operation & Maintenance (O&M) contracts. He will be responsible for full compliance of the conditions in the permits, EMPr and the EA.

5.3 Environmental Control Officer (ECO)

The EA states that Project Company will appoint an independent Environmental Control Officer (ECO) with relevant and appropriate experience or expertise for the construction phase of the development prior to the commencement of the construction phase. The ECO will be responsible to ensure that the conditions referred to in the EA, all other relevant environmental consents and the Site Documentation, are implemented to ensure compliance with the provision of this EMPr.

The ECO will operate independently to objectively monitor the implementation of the conditions and stipulations contained within the Site Documentation.

It is the responsibility of the ECO to monitor the degree of compliance to environmental legislation and the conditions stipulated in the Site Documentation. A daily site diary will be kept (Condition 6.4.4.) and compliance inspections will take place at regularly scheduled intervals.

The ECO will keep records of all activities on site, problems identified and transgressions. He/she will be responsible to maintain a detailed incident and complaint register on site along with a method statement on how these items are to be addressed and/or list mitigation measures that will remedy the issue.

The ECO will keep and maintain a daily site diary and will be responsible for ensuring all Site Documentation is up to date and relevant.

The ECO will be the custodian of all Site Documentation and will be responsible for the submission of all monitoring reports to the relevant CA's. The ECO will be responsible for keeping copies of all reports submitted to the Department as well as relevant communications, the scheduling of activities and the monitoring of such activities.

The ECO has the authority to stop works if in his/her opinion the operation imposes a serious threat to the environment or if an incident has occurred due to neglect or disregard. Any non-compliance recorded in terms of the conditions and stipulations of the Site Documentation, constitutes as a breach of Contract allowing the ECO to suspend part or all of the works, as required.

The ECO will be the official liaison between the CA and the Project Company, and must handle all sensitive information originating from whistle blowers and incidents and report these to the regulating authorities.

5.4 Waste Management Control Officer (WMCO)

The Project Company will designate a Waste Management Control Officer (WMCO), who will monitor and ensure compliance and correct implementation of all conditions and provisions as

stipulated in Conditions 7 of the EA and the EMPr related to waste management activities associated with the Project and its supplementary infrastructure.

The WMCO will report any and all non-compliance with any conditions pertained in the Site Documentation and related environmental consent requirements or provisions of the NEM: WA to the DEA via reasonable means and to the ECO.

The WMCO will be responsible for the implementation of method statements which identify and implement measures in respect of waste minimisation, including the reduction, recovery, re-use and recycling of waste

The WMCO will take all reasonable steps to ensure compliance by the Project Company with the licence conditions and requirements and the provisions of the NEM: WA.

5.5 Site Engineer (SE)

The SE a registered professional engineer appointed by the Project Company, as the site representative.

The SE has the authority to issue instructions and oversees the operations of the EPC Contractor. Upon request from the EM/ECO the SE has the mandate whereby, in emergency circumstances, he may override the instructions of the Contractor.

The SE is responsible for overseeing site works, issuing site instructions and variation orders to the Contractors, following request by the CER or ECO. The SE may act as the liaison with the Contractor and ECO on behalf of the PM.

The scope of involvement for the SE will cease at the end of the rehabilitation period, post construction of the Project.

5.6 Contractor's Environmental Representative (CER)

The CER is employed by the EPC Contractor to ensure that the EPC Contractor complies with the environmental standards, specifications, as well as the conditions and stipulations contained within the Site Documentation. The CER is available on site at all times and has the experience and/or knowledge to deal with environmental issues. It is furthermore the responsibility of the CER to communicate the contents of the Site Documentation to all staff working for and / behalf of the Contractor.

The person appointed as CER will have to be knowledgeable in the concepts of integrated environmental and waste management, have a sound background on environmental and waste management legislation and be suitably qualified / experienced.

The CER needs to ensure that all personnel working for and/or on behalf of the EPC Contractor and the O&M Contractor understands the concept of integrated environmental and waste management and the various issues specific to the site they are working on. The CER has the prerogative to issue non-conformances to the Contractors, hazard and risk certificates and fines if deemed suitable. A CER will be on site during both the construction and operational phases.

The CER will be responsible for the life of Project for the following tasks:

- Understanding the EMPr and all its specifications and implications.
- Ensuring that all aspects and specifications of the EMPr and approved Method Statements are implemented by the Contractors and their representatives.
- Reviewing and commenting on environmental compliance assessments and reports.
- Recording and informing the PM and ECO of incidents or problems while implementing the EMPr as well as recommending ways of resolving these incidents or problems.
- Reporting and recording all accidents and incidents in the absence of the ECO.
- Recording all public complaints received and immediately informs the D/P and ECO of these. Ensuring that proper records are kept of all compliance status/feedback reports, incident reports and complaints register and that these documents are available for auditing by the PM, Authorities or ECO upon request. Communicating the content of the ECO reports and any advice received from the ECO (verbally / in writing) to Contractor and Sub-contractors employees. Designating the working areas and ensuring that these are managed (including sensitive environments) as per the approved construction site layout plan.

6 Pre - Construction Phase

6.1 Environmental Compliance & Competency Record

Prior to construction, the CER needs to develop and implement an environmental control/management system on site, whereby records will kept on all relevant components. Records need to include the following:

6.1.1 Induction & Environmental Awareness Training register

It is the responsibility of the Contractor (EPC and O&M) to ensure that all staff undergo training and understand the requirements of the Site Documentation prior to construction and on a regular basis thereafter. This allows staff to remain complaint with the environmental obligations.

Induction/training may take the form of toolbox talks, demonstrations, media or a written test – whereby the employees' understanding of issues pertaining to his/her job is explained and assessed. The degree of specialised training/induction is dependent on the function performed by the employee and will be determined by the CER. This training must be presented at the level of the employees.

If new personnel are appointed the induction must be done with them before they commence duties on site. All levels of management and employees need to undergo environmental training and training attendance record needs to be kept and available for review by the ECO during construction. Copies/samples of the toolbox talks/induction material also need to be available for review by the ECO. It is proposed that a graphic list of potentially dangerous animals be compiled and presented to all workers as part of site induction.

As a minimum, induction training should cover the following:

- Explanation of the importance and relevance of the EMPr;
- Definition and explanation of the mitigation measures that must be implemented when carrying certain activities on site.
- Discussion of the potential environmental impacts that construction activities may have.
- Roles and responsibilities of all employees.
- The emergency preparedness and response strategies and associated plans (this should be combined with this induction, but presented by the contractors Health and Safety Representative).
- Explanation and delineation of the site specific areas of importance i.e. no-go areas, etc., as well as training with regards to wildlife management.
- Explanation of the management structure of individuals responsible for matters pertaining to the EMPr.

6.1.2 Legal Register

A legal register needs to be onsite from the start of construction, accessible to any and all personnel whose actions may have a significant impact on the environment. It is the responsibility of the CER to ensure that the legal register is kept updated with regards to all relevant legislation.

6.1.3 Site Instructions

The Environmental Compliance Record will capture all site instruction issued by the CER that relates to the EMPr and any other environmental consents. These instructions will also be used for the issuing of stop-work-orders and or fines by the ECO and CER.

6.1.4 Archaeological Artefacts

Should any archaeological artefacts be exposed during excavation, the activity needs to be stopped in the vicinity of the find. Artefacts may not under any circumstances be destroyed. The archaeological site shall be marked and fenced off and the South African Heritage Resource Agency (SAHRA) must be contacted within 48 hours or alternatively an archaeologist will be called to site to document the find and report to SAHRA. The findings will be recorded and photo-logged prior to the arrival of the archaeologist.

6.1.5 Site Documentation

A copy of the Site Documentation has to be available on site and easily accessible to any and all persons working for and or on behalf of the EPC Contractor. Issues and conditions of the Site Documentation need to be explained to employees.

6.2 Pre-Construction Policy Requirements

6.2.1 Community Health and Safety

As per IFC PS4, the Project Company and all Contractor working for and on behalf of the Project Company, will evaluate the risk and impacts to the health and safety of the affected communities during the project life-cycle and will establish preventive and control measures consistent with good international industry (GIIP), such as in the World Bank Group Environmental, Health and Safety Guidelines (EHS Guidelines) or other internationally recognized sources.

6.2.2 Grievance Mechanism

The aim of the grievance mechanism is to ensure that grievance/concerns raised by local landowners and or communities are addressed in a manner that is:

- Fair and equitable;

- Open and transparent; and
- Accountable and efficient.

A grievance mechanism only provides a platform of communication between the Project and the local community, it does not replace the rights of any individuals, entities or organizations to take legal action against the Project. This mechanism is however designed to address grievances received from the local community in order to avoid legal action.

Part of the Grievance Mechanism will be a Complaints Register, which needs to be on site at all times. This register has to be easily accessible to all stakeholders and I&AP's and made available for review to the ECO for all compliance investigations and scheduled environmental audits. The Register has to illustrate what measures have been implemented/taken in order to address the complaint as well as indicate what the timeline was in resolving the complaint.

The Grievance Mechanism is included in Annexure G of this EMPr.

6.2.3 Method Statements

The EPC Contractor will provide Method Statements for review and acceptance by the ECO and final approval by the SE prior to work commencing on aspects of the Project deemed or identified to be of greater risk to the environment and/or which may not be covered in sufficient detail in the construction phase of the EMPr. Where practical and deemed necessary these Method Statements may be required to be endorsed as acceptable by the environmental representative of the Relevant Authority.

A Method Statement is a "live document" in that modifications are negotiated between the Contractor and the ECO and/or the Project Company, as circumstances unfold. All Method Statements will form part of the construction phase Site Documentation and are subject to all terms and conditions contained within the construction phase EMPr.

Note that a Method Statement is a 'starting point' for understanding the nature of the intended actions to be carried out and allows for all parties to review and understand the procedures to be followed in order to minimise risk of harm to the environment.

Changes to, and adaptations of Method Statements can be implemented with the prior consent of all relevant parties.

A Method Statement describes the scope of the intended work in a step-by-step description in order for the ECO and the Engineer to understand the Contractors intentions. This will enable them to assist in identifying any mitigation measures required, which would minimize environmental impact during these tasks.

For each instance where it is requested that the Contractor submit a Method Statement to the satisfaction of the Engineer and ECO, the format should clearly indicate the following:

- What - a brief description of the work to be undertaken;
- How - a detailed description of the process of work, methods and materials;
- Where - a description/sketch map of the locality of work (if applicable); and

- When - the sequencing of actions with due commencement dates and completion date estimates.
- Who – The person responsible for undertaking the works described in the Method Statement;
- Why – a description of why the activity is required.

Based on the specifications in this EMPr, the following method statements are likely to be required as a minimum (more method statements may be requested at any time as required under the direction of the ECO):

- Vegetation clearing and topsoil stripping, handling and stockpiling.
- Transportation, handling, storage and disposal of hazardous substances d e.g. for fuels, chemicals, oils and any other harmful / toxic / hazardous materials.
- Cement and concrete batching.
- Construction phase logistics.
- Solid waste management procedures.
- Erosion remediation and stabilization.
- Fire control and management.
- Emergency preparedness and response.
- Re-vegetation, rehabilitation and re-seeding.

6.2.4 Stakeholder Communication

During the construction phase a method statement will be approved by the ECO addressing stakeholder engagement to specifically address issues such as transportation related impacts that may occur with the conveyance of large scale infrastructure, equipment or materials for the Project, any road closures, any water or services disruptions proposed. This Method Statement will be approved by the Project Company prior to construction and will be implemented by the relevant Contractor and Project Company dependent on the nature and scope of the required engagement.

Stakeholders will be informed of any large scale construction activities in advance and in writing Copies of all documents referring to stakeholder liaisons need to be kept on record (preferably signed) and maintained.

All communications will be made available to the ECO for compliance consideration purposes.

6.2.5 Traffic Management

The construction phase of the Project is expected to generate relatively high volumes of traffic thus making it essential to ensure traffic is managed in a manner that facilitates efficiency as well

as ensuring the safety of personnel and the local community as well as the receiving environment. The impact expected will not be only limited to the Project Site, but will also require the management of traffic impacts expected along local road networks proposed as access routes to the Project Site. The purpose of this plan, included in Appendix K, is to ensure that traffic is managed in such a manner as to avoid and minimise traffic risks to, and impacts on the health and safety of local communities, any personnel on site and the receiving environment, during routine and non-routine circumstances. The requirements of the plan is applicable to all persons working for or on behalf of Contractors during construction and operation which have been appointed to provide vehicles, machinery or drivers for the Project.

A copy of the Construction Phase Logistics Plan will be included as a method statement, once it has received the relevant approvals by the RE, Project Company and relevant authorities, where applicable. It will be the responsibility of the EPC Contractor to obtain all necessary permits that are required by the Construction Phase Logistics Plan such as abnormal load approvals etc.

A copy of the Traffic Management Plan kept on site by the ECO and will be applicable to all employees working at the Project Site. Subcontractors will also be required to comply with the Traffic Management Plan as issued for the Project.

6.2.6 Fire Management

Prior to construction the EPC Contractor will submit a Method Statement to the ECO and SE for approval with respect to fire management. This Method Statement will make provision for the conditions of the National Veld and Forest Fire Act, Act No. 101 of 1998. The EPC Contractor will ensure that sufficient preventative and remedial measures are identified and readily available on site and will undertake to report as required to the Department of Agriculture, Forestry and Fisheries (DAFF). Fire management will be executed and undertaken by fully trained on site fire fighters.

Measures such as fire breaks will to be implemented and maintained throughout the construction period by the EPC Contractor in accordance with the National Veld and Forest Fire Act. This will furthermore be upheld by the O&M Contractor once the Project has reached its operational phase.

The Method Statement will define potential sources of fire and appropriate responses to these sources. The Contractor will furthermore ensure that a detailed response plan is included in the Method Statement which defines the emergency response procedure.

The Project Company shall play an active role in the local veld fire prevention and fire protection association for the region.

6.3 Notification of Commencement to Competent Authority (CA)

The Project Company will notify the DEA in writing fourteen (14) days prior to the activity commencing (Condition 11.1). The notice will include the date on which construction is proposed to commence. A copy of this notification will be held as part of the Site Documentation for the Project.

The Project Company will provide the DEA (Conditions 10.4) with a copy of the Water Use License obtained for the Project prior to the commencement of construction.

6.4 Site Preparation

A photographic log will be taken by the ECO, prior to the commencement of the site establishment process. This log will be available on site as part of the Site Documentation and will log the following:

- Status quo of the Project Site;
- Project Site Camp;
- All flora to be conserved and/or earmarked for removal in accordance with the relevant licenses;
- Fauna in need of conservation;
- Existing infrastructure on site; and
- All other relevant matters.

Prior to the commencement of site establishment activities, the ECO will walk the site with the Contractor and SE in order to ensure the flora that has been permitted for destruction and removal are removed in accordance with the relevant licenses as issued by the DAFF and NC DENC and in accordance with the findings of the Ecological Walkdown Assessment. The location of these flora species have been included on the final site layout plan, however this action will be undertaken to ensure the evidentiary record that will be kept by the ECO is accurate and that vegetation clearing occurs within reason.

All no-go areas will be demarcated and appropriately recorded.

6.5 Site Camp Establishment

The construction site camp is a dedicated area which will house all buildings, offices, lay down yards, vehicle wash areas, fuel storage areas, batching areas and other infrastructure that is required for the execution of the Project.

6.5.1 Site Demarcation and Layout Plan

The location, design and layout of the construction camp will be determined by the SE and the Contractor alongside the CER in order to ensure a minimal impact on the environment, as this is a temporary fixture on site.

The site camp has to be established in an area with no or negligible environmental impact (i.e. in an area that has a low sensitivity rating according to the sensitivity analysis conducted on the site).

The site will be clearly demarcated by means of a fence as per the final approved site layout plans. The Contractor will take all reasonable measures to limit the extent of the area of

disturbance due to construction activities (the area must be earmarked for construction activities, and the activities must be confined to that).

All areas identified as no-go areas needs to be clearly cordoned off and indicated as such on the final site layout plans.

6.5.1.1 Hazardous materials Handling & Storage

The location of the hazardous material storage shall be within the demarcated construction camp area or other suitable designated area. Prior to the establishment the SE shall approve the location and design of the storage facility.

6.5.1.2 Batching and Concrete Mixing Area

The location of the batching plant needs to be designated by the SE along with the CER inputs in order to ensure that the plant is not placed in the close proximity to the onsite watercourse. The batching area shall furthermore be located in a low environmentally sensitive area within the designated plant laydown and assembly, as indicated on the site layout plan.

7 Construction Phase EMPr

The Construction Environmental Management Programme (CEMPr) serves as the Contractors' guideline for environmental management pertaining to all construction activities which are to be undertaken.

The CEMPr will specify the control measures that need to be implemented by the Contractor and project team prior and during the construction phase. These measures will be implemented where practical based on the scale and complexity of the construction activities associated with the Project.

The construction phase of the Project commences when the Project starts with clearing activities, earthworks and all the associated construction activities such as civil works. Commissioning is considered to be a construction activity, however during this period both EPC and O&M Contractors will be on site and both CEMPr and OEMPr enforceable. The construction phase will come to an end when the construction specific areas have been rehabilitated and the Facility is operational to the O&M Contractor specifications.

The construction phase is expected to last between 30 and 36 months and all mitigation measures as listed below will be applicable for this period.

7.1 Site Camp Establishment

The construction site camp is a dedicated area which will house all buildings, offices, laydown and assembly areas, vehicle wash areas, fuel storage areas, batching areas and other infrastructure that is required for the construction of the Project.

7.1.1 Fencing & Security

The EPC Contractor will maintain in good order all fencing and/or barriers during the construction period. The construction site will be properly demarcated and fenced and people will not be allowed to move outside the demarcated areas.

7.1.2 Site Access

Access to the construction site camp will be controlled and restricted at all times. The entrance to the site camp will be manned by a guard and a lockable gate is to be supplied. Unauthorised entry to the camp site will be prohibited.

No additional access roads may be constructed without the consent of the CER, landowners and SE and relevant permits (if applicable) – only existing roads and access road planned for the Project are to be used. If temporary roads are created during the construction phase of the Project they have to be decommissioned by the SE upon completion of the construction phase and rehabilitated to an acceptable state.

Furthermore, the EPC Contractor will ensure effective access control to the evaporation ponds and related waste management infrastructure, if implemented, to prevent unauthorised entry. Weather-proof, durable and legible signs in at least three official languages applicable in the area

displayed at each entrance to the site. The signs will indicate the risks involved in entering the site, and will also include the person responsible for the operation of the site.

Furthermore, a jackal fence (fence which is extended into the soil) will be erected around the evaporation ponds, waste management infrastructure, waste areas and the construction worker accommodation sites, to prevent the movement of nocturnal burrowing species into these areas where they may be injured, drown or ingest hazardous substances.

Fences will be designed in such a way as to create wildlife corridors or other measures to help ensure connectivity between the riparian habitats and ridges on the site, or connections between existing meta-populations.

7.1.3 Construction Camp Structures & Facilities

No permanent structures will be permitted within the construction site camp – only prefabricated structures such as containers and prefabricated living, dining and ablution quarters will be allowed. The modular sewer treatment facility will be installed and maintained by a reputable service provider. It will be installed in an area of low aquifer vulnerability as indicated by the geohydrological assessment. Cement slabs are allowed as foundation for these structures – however upon decommissioning these slabs must be removed and the compacted soils ripped and rehabilitated. The EPC Contractor will be held accountable for the implementation of these measures.

In the event a man-camp (housing facilities) will be erected on the Project Site, due to limited or no availability of suitable accommodation in neighbouring towns or settlements, the conditions and procedures depicted in the IFC Workers accommodation processes and standards Guideline Document will be implemented by the Contractor (refer to Appendix J for a copy of the Guidelines and Standards).

The location of the facilities is important to prevent exposure to wind, fire, flood and other natural hazards. It is also important that workers' accommodation is unaffected by the environmental or operational impacts of the worksite (for example noise, emissions or dust) but is sufficiently close that workers do not have to spend undue amounts of time travelling from their accommodation to the worksite.

Housing standards should include special attention to the following:

- minimum space allocated per person or per family (floor area; cubic volume; or size and number of rooms);
- supply of safe water in the workers' dwelling in such quantities as to provide for all personal and household uses;
- adequate sewage and solid waste disposal systems; and
- adequate sanitary and washing facilities, ventilation, cooking and storage facilities and natural and artificial lighting.

7.2 Earthworks

All earthworks must be undertaken in such a manner that least impacts the environment, as guided by the ECO. No earthworks machinery and/or equipment will be allowed outside of the demarcated construction area or development footprint. Construction/earthwork activities will be closely monitored by the CER. All equipment and earthworks vehicles need to be kept in good working condition in order to reduce the risk noise and pollution, including accidental hydrocarbon spillages/leakages.

7.3 Dedicated Area Specifications

7.3.1 Workshop

The EPC Contractor will ensure that all workshops, maintenance and production areas are located inside the demarcated construction camp area and be provided with an impermeable surface to ensure that no contamination of the soil takes place. For the control of surface water runoff, the area must be constructed with bunded walls and sloped to a catchment drain.

When servicing equipment, drip trays must be used to collect the waste oil and other lubricants. All waste material must be disposed of in accordance with national, regional and local laws. The waste material will be stored and removed off site in terms of the Minimum Requirements for the Handling, Classification and Disposal of Hazardous Waste and disposed of at an approved and duly licensed waste disposal site. Where possible, appropriate material shall be re-used or recycled. Wash water must also be collected if the possibility exists that lubricants and solvents will be transported by the wash water.

7.3.2 Vehicle Service Area & Wash-Bay

This designated area will be assigned for the purpose of servicing and washing of construction vehicles – vehicles/equipment will only be serviced within this area. This area has to have an impermeable surface, and be enclosed. The area has to be equipped with a drainage system – whereby the spilled hydrocarbons are channelled into a sump, to be treated or gathered for disposal at a licensed hazardous waste disposal site. All vehicles/equipment need to be kept in good working order to ensure that there are no oil/fuel leakages. The EPC Contractor must ensure that drip trays are used during vehicle servicing at all times and that the emergency spill response kits is on site at all times – and all personnel needs to have a complete understanding of their function and how to use them.

7.3.3 Batching and Concrete Mixing Area

Measures will be put in place to mitigate possible contamination originating from the batching plant by means of berm or bund walls. The EPC Contractor has to ensure that a designated area is cordoned off as a batching area. Under no circumstances is contaminated water allowed to leave the confines of the containment system.

The batching area is indicated on the site layout plan and batching in the identified area.

Cement is under no circumstances to be mixed on raw soil or in close proximity the watercourse on site. In the event cement mixing is required to take place outside of the designated areas, plastic liners and/or mixing trays must be used.

Accidental spillage of cement/concrete has to be cleaned up immediately and remediation measures implemented by the EPC Contractor with assistance from the ECO.

7.3.4 Eating Areas

The EPC Contractor's employees shall only eat in designated areas indicated by the EPC Contractor and approved by the SE.

Food preparation shall be done in a specifically demarcated area on site and no open fires are permitted. Adequate heating and food preparation sources/areas have to be provided for employees in order to ensure no fires will be made on site. The EPC Contractor shall provide adequate scavenger-proof and weatherproof refuse bins in this area.

7.3.5 Ablution Facilities

The location of the portable chemical latrines, prefabricated ablution facilities and modular sewer treatment facility must be approved by the Engineer prior to establishment. Ablution and sanitation facilities should not be located within a 100m from a 1:100 year flood line. There must be at least one latrine per 15 employees on site. The EPC Contractor must provide the toilets in terms of the health and safety standards and in accordance with any relevant local municipal by-laws. The EPC Contractor is responsible for their maintenance and servicing on a daily basis. The EPC Contractor must take all reasonable precautions to ensure that no spillages occur when the toilets are cleaned or emptied. Any on site disposal of waste from toilets is strictly prohibited. The toilets must be maintained and kept clean at all times. Toilets must be inspected for leaks daily and leaking toilets must be repaired immediately or removed from the Project Site.

7.3.6 Equipment Maintenance & Storage

The EPC Contractor must ensure that all vehicles, plant and equipment are kept in good working order and serviced regularly in line with manufacturer's specifications. Leaking equipment must be repaired immediately or removed from the site. All maintenance of equipment and vehicles shall be performed in the workshop or other suitable designated area.

The EPC Contractor shall demarcate an area in which equipment and vehicles may be stored. The location of this area shall be approved by the SE. The EPC Contractor must take measures to ensure that the surface of the designated area is not contaminated as a result of hydrocarbon leaks from any machinery or vehicles.

7.3.7 Waste Water Treatment Plant and Evaporation Pond(s)

The site construction must be approved by a registered professional engineer and compliant with recognised civil engineering standards and adequately lined to protect surface and groundwater

resources, as defined in the EA. A stormwater management plan is included in Annexure H for the Project Site.

The Wastewater Treatment Works (WWTW) and evaporation ponds will be constructed as per the approved designs, inclusive of the liner design, submitted to the DEA (EA & WML) and the DW&S (Water Use License Application (WULA)).

The WWTW facility will be constructed on a firm, impermeable base so as to prevent possible groundwater contamination.

7.4 Material Storage & Handling

7.4.1 General Material Storage & Handling

The EPC Contractor must ensure that an area is cordoned off within the site camp as the designated materials delivery, handling and storage area. Materials need to be protected from the elements by means of cover, the nature of cover will be dictated by the nature of the material stored. Products such as cement need to be stored in a covered area on an impermeable surface to prevent spillage and wastage.

All materials need to be stored within the construction site camp, with the lay-down area adhering to the specifications stipulated by the CER and SE. The material lay-down and storage area needs to be clearly marked and indicated on the site layout map.

The EPC Contractor is responsible for ensuring that any materials delivery service providers and/or construction vehicle operators are informed of all procedures and restrictions (e.g. which access roads to use, “no go” areas, speed limits, dust control, etc) required to comply with the EMPr before they arrive at site and off load any materials. The EPC Contractor shall ensure that the service providers and/or construction vehicle operators are supervised during off-loading by someone with an adequate understanding of the requirements of the EMPr. The person must be authorised to take the necessary actions if the service providers do not adhere to the requirements of the EMPr.

7.4.2 Hazardous materials Handling & Storage

The EPC Contractor shall comply with all relevant national, regional and local legislation with regard to the transport, use and disposal of hazardous materials. The EPC Contractor shall provide the SE with a list of all hazardous materials that may be used on site, together with the storage, handling and disposal procedures of these materials. This information shall be made available to everyone on site prior to being used.

The location of the hazardous material storage shall be within the demarcated construction camp area or other suitable designated area. Prior to the establishment the SE shall approve the location and design of the storage facility. It should preferably not be located within an area of low aquifer vulnerability.

All materials classified as hazardous need to be stored in a locked storage area/container and access needs to be controlled. The classification, handling and treatment of all hazardous materials will conform to the latest edition of the document “Minimum Requirements for Handling,

Classification and Disposal of Hazardous Waste, Waste Management Series, Department of Water Affairs and Forestry" or its successor.

The temporary storage area for spent hazardous materials needs to be enclosed by bund walls, under cover (roof) and located on an impermeable surface. The relevant Material Safety Data Sheets (MSDS) needs to be on site and accessible to all parties working with or near the hazardous materials. The EPC Contractor needs to keep record of all hazardous material on site. A Standard Operating Procedure (SOP) for the handling, storage and disposal of hazardous materials needs to be implemented and enforced by the CER. It is the responsibility of the EPC Contractor to ensure that all applicable SOP are drafted, signed off and implemented on site. The EPC Contractor will after drafting of the SOP's submit these to the RE for approval and sign-off before implementation.

In the event of an emergency, all personnel working for and on behalf of the EPC Contractor need to be aware of and trained with regard to the Emergency Preparedness and Response Plan.

7.4.3 Fuel (Petrol & Diesel) and Oil Storage

The EPC Contractor shall ensure the establishment of designated fuel storage and refuelling bay within the construction camp site. The refuelling bay needs to be on an impermeable surface, enclosed with bund walls that can capture 110% of the fuel storage tanks' capacity. The bay also needs to be fitted with a hydrocarbon drainage system in the event of a leak or spill.

This area needs to be equipped with an emergency spill kit and all personnel needs to be trained in handling and clean-up of an incident or spill. No underground fuel or diesel storage is allowed – fuel will be transported to the site as and when required and stored in the temporary fuel storage tank. The location of the temporary fuel storage tank will be clearly indicted on the final approved site layout plan.

The refuelling of vehicles is allowed within the designated refuelling bay area within construction site camp. Where this is not possible, the EPC Contractor shall notify the Engineer and get approval of the refuelling method to be used. The use of hand held funnels are strictly prohibited.

Any leaking equipment shall be repaired immediately or removed from the site. Refuelling shall be carried out by means of pumps with hoses that enter the fuel receptacle, or gravity fed hoses fed from elevated tanks. The use of hand held funnels are strictly prohibited.

7.4.4 Fire Safety Measures

The EPC Contractor will ensure that fire extinguishers are located in practical and accessible positions across the Project Site, and must be easily and readily accessible in the event of an accidental/uncontrolled fire. All site vehicles will have fire extinguishers. No open fires will be allowed on site.

The fuelling station will be subject to a separate method statement, specifically designed for the fuel containment facility. This method statement will be approved by the ECO and SE, once received from the relevant subcontractor. All staff will be adequately trained in the implementation of the conditions of the method statement.

7.4.5 Emergency Preparedness & Response Plan

The Contractor will implement an Emergency Preparedness and Response Plan for the Project Site that provides a detailed explanation of what should be done in the various emergency situations. This plan is aimed to describe the different actions to be taken in emergencies, to describe principles and responsibilities for identification of potential for accidents; for response to emergency situations; for mitigating environmental impacts; and for restoring operations after accidents.

This plan will form part of the method statement submitted to the ECO by the Contractor and known to all persons working on site and has to also provide emergency contact information. The plan will be reviewed annually and after each emergency and or accident to reflect changing conditions. The plan will reflect the conditions of IFC PS1 and amongst other the plan will include the following:

- Identification of areas where accidents and emergency situations may occur;
- communities and individuals that may be impacted;
- response procedure;
- provisions of equipment and resources;
- designation of responsibilities;
- communication, and
- periodic training to ensure effective response to potentially Affected Communities.

In addition, the Project Company will also assist and collaborate with affected communities, local government agencies and other relevant parties in their preparation to respond effectively to emergency situations especially when their participation and collaboration are necessary to respond to such emergency situations.

A copy of the Emergency Preparedness and Response Plan is included in Appendix L.

7.5 Waste Management

7.5.1 Solid & General Waste Management

The Project Site will be kept neat and tidy at all times. No littering by construction workers will be allowed, during the construction period. Fines will be implemented for any and all employees working for and on behalf of the EPC Contractor found littering – this fines system will be implemented by the CER.

It is the responsibility of the EPC Contractor to provide adequate litter collection facilities for safe disposal at a licensed waste disposal sites prior to construction.

Proof of disposal will be kept on site as part of the Site Documentation.

It is the responsibility of the EPC Contractor to implement a refuse control system which applies to all waste generated on site:

- Building rubble;
- Solid general waste;
- Cement bags and wrapping materials;
- Surplus food, packaging and organic waste; and
- Hazardous waste/materials.

Solid waste shall only be stored in the designated general waste storage area in covered, tip proof waste skips for disposal. The burying and/or burning of refuse/waste is at no time permitted on the Project Site. It is the responsibility of the EPC Contractor to ensure that there are enough refuse bins placed around site. These bins need to be closed, in order to protect the contents from the elements i.e. restrict leaching and emptied on regular basis. Temporary waste storage facilities need to be equipped with waste skips, to be emptied on a weekly basis. The waste skips need to be placed on an impermeable surface and enclosed.

The mixing of general waste and hazardous materials is not permitted – waste separation needs to occur before waste is placed in the waste skips.

The EPC Contractor is responsible for keeping the site neat and tidy – no refuse is to be found on site outside bins/skips allocated for these purposes.

The EPC Contractor is responsible for the removal and disposal of any and all general solid waste generated during the construction phase of the Project to the active workface of the licensed waste disposal site. Record of this must be kept on site and readily accessible for the ECO to audit.

7.5.2 Hazardous Waste Management

The temporary storage area for used hazardous materials needs to be enclosed by bunds/bund walls, under cover (roof) and located on an impermeable surface. All used hazardous material needs to be disposed of at a licensed hazardous waste disposal facility.

The Contractor must keep records of all disposal certificates.

7.5.3 Effluent Management

All sewage/effluent water originating from the site camp office will be disposed of in such a manner as not to adversely affect the surrounding water sources (streams, rivers, wetlands, etc.). No wastewater shall be allowed to enter the drainage system. Sanitary arrangements should be to the satisfaction of the CER and ECO, the local authorities and all applicable legal requirements. It is essential that sewage be managed appropriately by means of a modular sewer treatment works and that all required authorisations are obtained from the local authorities in terms of the disposal of the effluent thereof in the evaporation ponds. The EPC Contractor is

responsible for recording the volumes of sewage effluent disposed of in the evaporation ponds on a weekly/monthly basis and ensure that it complies with the volumes as agreed upon by the CA.

7.6 Biodiversity Management

Where avoidance of impacts is not possible, measures to minimise impacts and restore biodiversity and ecosystem function should be implemented in accordance with IFC PS6. Areas earmarked for construction that need to be cleared of vegetation, will be done in consultation with the CER/ECO, to ensure biodiversity is maintained and vegetation is conserved. Vegetation and tree clearing will be confined to the construction area, in accordance with the DENC and NFA Flora Harvesting Permit and Removal License.

Under no circumstances are Contractors allowed to use the cleared vegetation or trees as fire wood or for any other purpose. All off-cuts need to be disposed of at a licensed waste disposal facility, in accordance with the standard waste management practice, and disposed of at a duly license waste management facility.

Alien and/or invasive flora species must be removed by the EPC Contractor upon instruction from the CER/ECO, in accordance with the regulations pertained in the Conservation of Agricultural Resource Act of 1983. An Alien and Invasive Management Plan has been attached in Appendix C to address the removal and disposal of alien invasive species.

Complaints regarding the destruction of and/or damage to indigenous flora need to be reported to the ECO and recorded in the complaint log.

Chipped woody biomass removed during the earthworks need to be used as mulch and evenly spread evenly across the veld as to provide biomass for micro-organisms (this may also be stockpiled for the rehabilitation phase of the Project.

Animals may not be poached, hunted, trapped, snared or killed during the construction phase of the project, nor will fishing in the water bodies be allowed, unless it poses a direct and immediate threat to human health and a safety or unless otherwise permitted.

Unregulated or managed vehicular traffic should not be allowed after dark in areas which are not properly lit in order to limit accidental killing of nocturnal animals. Dangerous animals should be handled by a competent person. Ensure that a snake handler is available at all times. As part of the method statement, the Contractor will put in place an emergency plan addressing snake bites on site.

The Contractor should appoint an authorised specialist to conduct a search and rescue operation in all affected areas to remove animals from old termite mounds prior to the commencement of construction activities (vegetation clearing and ground levelling) (refer to Appendix D for a Plant Rescue and Plant Protection Plan). Reptiles and small mammals that utilises these micro-habitat should be captured and released in suitable nearby areas.

Allow for a suitable buffer in order to provide some protection of sensitive areas against peripheral impacts, wetland related habitat types in particular. All areas that were ascribed as High Ecological Sensitivity should be buffered against potential impacts. A 100m buffer was included around the riparian habitat zone outside of the wetland delineation and 1:50 and 1:100 year flood lines. A buffer of 35m (excluding the approved heliostat field) has been incorporated in the final site layout, as per the conditions of the EA.

The EPC Contractor should compile and implement environmental monitoring programme, the aim of which should be ensuring long-term success of rehabilitation and prevention of environmental degradation. Environmental monitoring must be conducted at least twice per year (summer, winter) by a duly qualified ecologist.

Care should be taken by the EPC Contractor to limit construction, maintenance and inspection activities in areas of high slopes, drainage lines, etc. to dry periods in order to curb occurrence/ augmentation of erosion in areas of existing erosion, destabilizing of substrate. The Contractor shall implement strict erosion monitoring and management procedures in all areas where slopes are present.

Ensure off-site storage of hazardous materials or storage thereof in properly constructed facilities with the required safety measures in order to prevent accidental spillage, contamination or pollution. The EPC Contractor is required to develop prior to construction an emergency maintenance plan to deal with any event of contamination, pollution or spillages, particularly in sensitive areas.

All individuals and/or stands of protected trees will be clearly and visibly marked prior to the start of construction or maintenance procedures, in accordance with the findings of the Ecological Walkdown.

Demarcate construction areas by semi-permanent means in order to control movement of personnel, vehicles, providing boundaries for construction sites in order to limit spread of impacts.

Painting or marking of rocks or vegetation shall not be allowed to identify locality or other information as it will disfigure the natural setting. Marking shall be done by steel stakes with tags, if required. Marking of plants should be done by means of semi-permanent (removable) marker tape.

Access is to be established by vehicles passing over the same track on natural ground. Multiple tracks are not permitted, unless otherwise permitted. Vehicular traffic shall not be allowed in permanently wet areas, no damage shall be caused to wet areas. Where necessary, alternative methods of construction shall be used to avoid damage to wet areas.

Prohibit construction of new access roads, over and above that which is permitted by the Department of Public Works and Roads. Wherever possible, existing internal roads will be used. In the event a new road is required and not provided for by any of the existing permits and consents, the Contractor will be responsible for obtaining the required permits prior to the construction of the road.

Removal of vegetation shall be avoided until such time as soil stripping is required and similarly exposed surfaces must be re-vegetated or stabilised as soon as is practically possible unless permitted.

Remove and store topsoil separately in areas where no excavation/ degradation takes place. Topsoil should be used for rehabilitation purposes in order to facilitate regrowth of species that occur naturally in the area.

The removal or picking of any protected or unprotected plants shall not be permitted and no horticultural specimens (even within the demarcated working area) will be removed, damaged or tampered with unless agreed to by the ECO or permitted by the relevant authority.

Comply with conditions and recommendations of the required Biodiversity Flora Harvesting Permit(s) in terms of the National Forests Act (Act No. 84 of 1998) under Government Notice GN

1012 of 2004 and GN 767 of 2005 as well as Northern Cape Department Environment and Nature Conservation (NCDENC).

Cutting/ pruning/ damaging of any protected tree species should not be allowed at any circumstances, unless a permit has been obtained for this purpose.

Due to the small extent of habitat taken up by the *Lithops aucampiae* subsp. aucampiae var. aucampiae, it is recommended that this species not be translocated, and their habitat earmarked for conservation.

7.7 Heritage Management

The Project Company is responsible for siting and designing a Project to avoid significant adverse impacts to cultural heritage in accordance with IFC PS8.

PGS06 was identified as the only heritage find/site in need of protection and permitting in accordance with the National Heritage Resource Act No.25 of 1999. In order to mitigate the identified as well as any undocumented finds of archaeological sites specifically within the Project Site, the CER is required to ensure that the site(s) are properly documented.

PGS06 has been defined as a no-go area and will be fenced off from the remainder of the construction footprint in the heliostat field. A buffer of 10m will be included around this find/site. In the event any other heritage finds not recorded as part of the EIA is unearthed or found, during construction, a stop-works order needs to be issued immediately and all work to cease.

In the event unmarked cemeteries and/or infant burial sites are unearthed during construction, a stop-works order needs to be issued immediately and all work to cease. Hereafter a heritage impact practitioner needs to be contacted to further investigate the find. In the event a grave has to be relocated, the heritage impact practitioner will commission the full grave relocation process that includes comprehensive social consultation.

The grave relocation process includes:

- A detailed social consultation process, that will trace the next-of-kin and obtain their consent for the relocation of the graves, that will be at least 60 days in length;
- Site notices indicating the intent of the relocation
- Newspaper Notice indicating the intent of the relocation
- A permit from the local authority;
- A permit from the Provincial Department of health;
- A permit from the South African Heritage Resources Agency if the graves are older than 60 years or unidentified and thus presumed older than 60 years;
- An exhumation process that keeps the dignity of the remains and family intact;
- An exhumation process that will safeguard the legal implications towards the developer;
- The whole process must be done by a reputable company that are well versed in relocations;

- The process must be conducted in such a manner as to safeguard the legal rights of the families as well as that of the development company.

In the unlikely event of unearthing a heritage/cultural artefact during the construction phase of the Project – it has to be reported to the CER and ECO immediately, and all construction work/activities stopped within the area of the find. The EM also has to ensure that the SAHRA is notified in order to undertake the required investigation.

7.8 Water Management

All conditions of the Water Use License will be implemented and adhered to.

7.8.1 Water for Human Consumption

Water will be sourced from the Vaal Gamagara Bulk Supply Water Pipeline for the construction and operational phase of the Project.

The EPC Contractor will ensure that potable water will be available at readily accessible points on site – this includes the construction area. The EPC Contractor will employ responsible water use practices.

7.8.2 Stormwater Management

A Stormwater Management Plan must be developed and implemented (refer to Appendix G). Clean and dirty surface runoff must be separated and diverted away from Project Site. Measures must be implemented to minimize standing water in the construction area. All spoil/stockpile areas must be constructed in such a manner as to prevent erosion resulting from surface runoff. As far as possible, efforts to avoid contaminated stormwater from entering natural water courses and resources will be employed.

7.8.3 Wetland Management

The following measures are proposed in order to limit sedimentation during construction:

- Major vegetation clearing activities and earthworks should be undertaken during the dry season as far as practically possible.
- The footprint of vegetation clearing should be limited to the direct footprint of the Project where practical. The construction area should be fenced off prior to the commencement of construction activities and all construction activities should be limited to this footprint.
- Access roads and construction roads should include regular low levels humps to slow down stormwater flow and direct storm water off the road surfaces and into adjacent grassland at regular intervals to minimise erosive energy of stormwater runoff.
- Stormwater infrastructure should include sediment traps.

Water quality management actions include:

- All potentially polluting and hazardous substances used and stored on site should be stored in clearly demarcated areas.
- Storage areas for diesel, oil and other polluting substances must have adequate spillage containment measures to contain any spills within the direct area of the spill. Ideally, all potentially polluting substances should be stored in bunded areas of sufficient capacity to contain the full volume plus 10% of the storage containers.
- All re-fuelling areas and workshops should make use of drip trays to capture fuel and oil spills during re-fuelling or during vehicle maintenance and repairs.
- Stormwater should be diverted around the storage areas of polluting substances to prevent contamination of clean storm water.
- Sufficient quantities of spill clean-up materials (e.g. Drizit or Spills orb) should always be available on site. Once used, absorbent material and contaminated soil should be disposed of at a registered hazardous waste disposal site.
- The following guidelines apply to the use of polluting substances on site, and specifically to the use of cement and concrete:
    - Carefully control all on-site operations that involve the use of cement and concrete.
    - Limit concrete mixing to single sites where possible.
    - Use plastic trays or liners when mixing cement and concrete: Do not mix cement and concrete directly on the ground.
    - Dispose of all visible remains of excess cement and concrete after the completion of tasks. Dispose of in the approved manner (solid waste concrete may be treated as inert construction rubble, but wet cement and liquid slurry, as well as cement powder must be treated as hazardous waste)

In order to reduce increased flows within a watercourse the EPC Contractor will not discharge any dirty or contaminated water into a watercourse or allow for release into the receiving environment.

6.10.3.1 Water quality monitoring

Surface water monitoring will be performed in accordance with the specifications as determined and agreed upon by the CA and ECO.

7.9 Soil & Erosion Management

In order to reduce the risk of erosion the EPC Contractor will design and implement a stormwater management system for the site – this system has to be signed off by the SE. The system will be

designed in such a manner that the clean and dirty surface runoff is separated and diverted of site.

Contaminants need to be stored away from stockpiles, and they need to be kept free from refuse, biological material and hydrocarbons. Soil stabilisation measures i.e. soil wetting or chemical stabilisation, needs to be implemented at all cleared areas and stockpile areas.

7.9.1 Topsoil Handling

Topsoil is regarded as the top 300 mm of soil and needs to be stockpiled at a designated point – clearly indicated on the site layout plan.

Removed topsoil needs to be handled as little as possible – preferably only twice – once upon removal and once during rehabilitation.

Soil stockpiles are not allowed to be higher than 2.5 meters.

Areas designated for stockpiling will be indicated on the final site layout plan and managed accordingly.

7.9.2 Cable Trenching

Trenching will be kept to a minimum through the use of single trenches for multiple service provision where possible.

The planning and selection of trench routes shall be undertaken in liaison with the CER and ECO and cognisance shall be given to minimising the potential for soil erosion. Trench routes along with permitted working areas will be clearly defined and marked with prior to excavation.

The stripping and separation of topsoil and subsoil will occur upon approval of Method Statement by CER or ECO. Soil shall be stockpiled for use as backfilling as directed by the CER with input from the ECO.

Trench lengths shall be kept as short as practically possible before backfilling and compacting.

Areas backfilled will be done so as to align with the original surface fall (or slightly higher to allow for settlement) as the surrounding land surface to minimise erosion. Excess soil shall be stockpiled in an area approved by the CER with input from the ECO

Appendix I and J provides a copies of the Soil and Erosion Management Plans and Appendix G for the Stormwater Management Plan.

7.10 Pollution Risk Control Measures

It is also the responsibility of the EPC Contractor to minimise and where practicable avoid pollutants contaminating the Project Site and surrounding properties and natural environments. Pollution risks may arise from factors such as the Project Site's layout, drainage and the activities that will be undertaken during the operational phase. The EPC Contractor has to compile a pollution risk control sheet wherein all the pollution sources/risks are identified and the ways in which he/she plans to manage and or mitigate these risks.

These mitigation measures can be procedural or structural in nature. **Structural control measures** would typically be of a physical nature and are designed to control the movement of possible contaminants around the site, such as designated batching areas, material storage and handling areas etc. Bund walls, stormwater channels and enclosed-sump systems can all be categorised under structural control measures.

Procedural control measures are verbal or written instructions on how to carry out certain operations such as Standard Operating Procedures (SOP's) for the handling of spills, the decanting of fuel/hazardous materials and refuse management.

7.11 Nuisance Control

7.11.1 Dust Control

Dust control measures need to be implemented during the construction period. The EPC Contractor has to ensure that all vehicles/machinery abide by the traffic regulations and that the speed limit is enforced. In addition to this measure, the EPC Contractor has to implement a dust suppression programme i.e. watering or chemical stabilisation in order to manage the dust generated from aggregate/soil stockpiles and roads. The dust suppression method statement/programme will be submitted to the ECO for review and acceptance and final approval by the SE prior to implementation by the EPC Contractor.

7.11.2 Noise Management:

Where possible, stationary noisy equipment (for example compressors, pumps, pneumatic breakers,) should be encapsulated in acoustic covers, screens or sheds. Use of low-noise generation construction machinery. Noise control measures on construction machinery must, however, be agreed with the manufacturer.

Curtailing the uses of reverse-warning signals on site vehicles in certain areas and at certain times. Consideration of alternative safety measures may be necessary when taking such a measure. All construction vehicles, plant and equipment are to be kept in good repair, for example, cover sheets should not vibrate or rattle; wheels, rollers and pulleys should not squeak.

With regard to unavoidable very noisy construction activities in the vicinity of noise sensitive areas, the EPC Contractor should liaise with local residents and landowners on how best to minimise impact, and the local population should be kept informed of the nature and duration of intended activities in advance. When construction works need to continue over a weekend or on a public holiday, all directly affected landowners and parties need to be informed in writing at least two days before such work commences.

As construction workers operate in a very noisy environment, it must be ensured that their working conditions comply with the requirements of the Occupational Health and Safety Act (Act No 85 of 1993), and where necessary ear protection gear should be worn. When it is expected that the activity will generate noise levels over the 85db threshold, all employees exposed to the noise have to wear suitable hearing protection gear. All engineering controls aimed at reducing the level of noise generated by the proposed activity needs to be implemented.

7.11.3 Visual Impact Mitigation

The EPC Contractor will be responsible for reducing the aesthetical impact of the Project on the visual receptors.

The EPC Contractor has to allow, where screening has been implemented that the indigenous vegetation is maintained and blends in with the natural landscape to reduce the visual impact. The minimum amount of existing vegetation and topsoil should be removed from construction areas. Ensure, wherever possible, all existing natural vegetation is retained and incorporated into the site design. Eradication of vegetation should be done in 'natural manner', avoiding harsh straight lines;

6.13.4.1 Lighting

Light pollution should be seriously and carefully considered and kept to a minimum wherever possible as light at night travels great distances.

Security and flood lighting should only be used where absolutely necessary and carefully directed i.e. away from nearby sensitive receptors and communities. Wherever possible, lights should be directed downwards so as to avoid illuminating the sky.

The negative impact of night lighting, glare and spotlight effects, can be mitigated using the following methods:

- Install light fixtures that provide precisely directed illumination to reduce light "spillage" beyond the immediate surrounds of the CSP site.
- Avoid high pole top security lighting along the periphery of the site and use only lights that are activated on movement at illegal entry to the site.
- Use security lighting at the periphery of the site that is activated by movement and are not permanently kept on.

In accordance with the conditions pertained in the SA CAA Conditional Approval for the tower the following is required:

- Night markings require medium intensity type "B" (20,000 candela-flashing) at the top of the structure
- Intermediate lighting is not feasible, and this requirement is to be met by external floodlights illuminating the tower to be visible in the distance of 5km on a clear night.
- Floodlights may be of any colour – providing conditions are met.

7.12 Social & Socio-Economic

It is expected that the Project will prompt the migration of people to the area. This could be seen as a threat by locals, resulting in social conflicts between the local population and the migrant work force from the local population perceiving the migrant workers as "stealing" their employment opportunities, disrupting their families and neighbourhoods as well as bring with numerous negative

social perceptions such as theft, increased crime levels, increased drug and alcohol usage etc. This could furthermore lead to increased pressures on existing services and infrastructure servicing the area.

In order to mitigate these proposed impacts during construction the EPC Contractor will employ the following measures:

- Implement strict and clear labour recruitment practices that could reduce the desire of potential employment seekers to loiter around the Project Site in the hope of finding temporary employment.
- Restrict and control the movement of workers between the site and settlements or towns in order to minimise loitering, where possible. This can be achieved by providing scheduled transportation services between the construction site and area of residence for employees.
- Where possible, maximise the employment of local people from surrounding communities.
- Ensure that any damages or losses to nearby affected farms that can be linked to the conduct of construction workers are adequately investigated and that a reimbursement and penalty procedure is in place.
- Engage with local authorities and inform them of the development as well as discuss with them their ability to meet the additional demands on social and basic services created by the in-migration of workers.
- Where feasible, assist the municipality in ensuring that the quality of the local social and economic infrastructure does not deteriorate through the use of social responsibility allocations.
- In order to minimise the opportunity for theft, all portable construction equipment and material must be locked away within the Contractor's Site Camp overnight and during holiday periods.
- Fuel storages tanks must be locked when not in use in order to make sure that attempts at stealing fuel is not made and spillage occur.

8 Rehabilitation after Construction

Progressive rehabilitation, as outlined within the Site Documentation, must be undertaken under the supervision of the SE and ECO (refer to Appendix E for the Rehabilitation Plant).

8.1 Notification of CA

The Project Company must submit an environmental audit report to the DEA within 30 days of completion of the construction phase and within 30 days of completion of the rehabilitation phase.

The environmental audit report needs to adhere to the conditions and requirements as set out in Condition 9.2 of the EA.

8.2 Rehabilitation after Construction

In the instance that the temporary construction camp and facilities fall outside the ultimate footprint of the heliostat fields and the land requires remediation it is the responsibility of the EPC Contractor to rehabilitate the construction site camp and the construction servitude once construction has ceased.

Rehabilitation must be scheduled to take place as soon as possible after construction has been completed with acceptable cover being achieved after 6-12 months. Only indigenous vegetation may be used for the rehabilitation plan.

The purpose of the rehabilitation plan is to ensure that areas cleared or impacted during construction activities of the Project are rehabilitated with a plant cover that reduces the risk or erosion from these areas as well as restores some ecosystem function.

The plan aims to

- Achieve long-term stabilisation of all disturbed areas to minimise erosion potential for the Project Site
- Re-vegetate all disturbed areas with suitable indigenous plant species.
- Minimise visual impact of disturbed areas.

8.2.1 Construction Camp Structures, Facilities & Fencing

Upon completion of construction, all structures, facilities and fencing are to be removed from site with respect to designated construction related facilities, unless otherwise permitted.

Cement /concrete slabs allowed for foundation structures are to be removed and the compacted soils to be ripped and rehabilitated through grassing.

8.2.2 Water Management

Stormwater trenches utilised for the purpose of the site camp are to be levelled and grassed to prevent erosion. The construction camp area is to be grassed to prevent erosion (Refer to Stormwater Management Plan in Appendix G).

8.2.3 Effluent/Sewage

All prefabricated ablution facilities and temporary chemical latrines are to be removed from the Project Site and any resultant waste disposed of at the municipal sewage treatment works or disposed of by a duly authorised waste disposal contractor. Proof of disposal records need to be available at all times.

8.2.4 Access Roads

All access roads used during the course of the construction phase of the Project that are not to be used during the operation of the Project, are to be rehabilitated to their previous states, by the Contractor.

8.2.5 Soil

All soils that were compacted during construction phase of the Project needs to be ripped, the topsoil to be re-spread and the entire area re-grassed. All topsoil which has been removed or disturbed during the construction phase must be replaced, levelled and grassed to stabilise the construction area and prevent erosion and dust.

8.2.6 Visual Mitigation

The visual impact of the construction area and site camp will be mitigated by means of landscaping and grassing the area with species indigenous to the area, as per the O&M operational parameters as provided for in the Rehabilitation Plan (Appendix E).

8.2.7 Dust Management

With regards to dust management the construction camp site and construction servitude is to be grassed with species indigenous to the area, as per the O&M operational parameters as provided for in the Rehabilitation Plan (Appendix E).

9 Auditing During the Construction Phase

9.1 Recording and Reporting to the Department

The Project Company will keep copies of all records relating to monitoring and auditing on site and have it available for inspection at any time to any relevant authority.

All records and/or reports required or resulting from activities related to this EA will be:

- Legible;
- Submitted as required and will form part of the external audit report;
- If amended, the record and /or report will be amended in such a way that the original and any subsequent amendments remain legible and are retrievable; and
- Be retained in accordance with documented procedures which are approved by the DEA.

All documentation e.g. audit/monitoring/compliance reports and notifications, required to be submitted to the DEA in terms of the EA will be submitted to the Director: Compliance Monitoring at the DEA as per the agreed upon schedule with the CA.

The Project Company will keep records and update all information referred to in Annexure II of the EA and submit this information to the DEA on an annual basis. Refer to Annexure II of the EA (Appendix A) for a copy of this format.

The ECO will be responsible for the compilation of a monthly report pertaining to all environmental matters on site and the relevant authorisations pertained in the Site Documentation.

9.2 Incident reporting

The Project Company must within 14 days inform the DEA and DWS of the occurrence of any incident or detection of an incident as per Condition 17.4 of the EA, and issue a Remedial Plan of Action along with the notification in accordance with the conditions pertained in the EA, WML and WUL. A record of all incidents must be kept during the construction and operational phases of the Project, and must be available for both internal and external audits.

9.3 Internal Audits

Internal auditing must be conducted annually by the Project Company. Official audit reports must be compiled by the relevant auditor and the findings of these audits must be available to the external auditor and the authorities, where applicable. Non-conformances raised during audits must be addressed and closed-out to ensure further compliance.

All records and audit reports for the Project during construction and operations must adhere to the conditions defined in the EA, WML, WUL and all other relevant environmental consents as provided for under the Project Site Documentation.

9.4 External Audits

The Project Company will appoint an independent external auditor to audit the site annually and this auditor must compile an audit report documenting the findings of the audit. Findings raised in audits must be addressed and corrective actions included for auditing in quarterly compliance audits. The external audit report must be submitted by the license holder to the CA on an annual basis, and within 30 days from the date on which the external auditor finalised the audit.

The external auditor team will consist of the following persons:

- An Environmental Assessment Practitioner (EAP) with ECO experience
- WMCO; and
- A Professional Registered Engineer.

The external audit report must:

- Specifically state whether the Project is in compliance with the Site Documentation, with specific reference to whether the conditions of the EA, WML, WUL and all other environmental permits and consents contained in the Site Documentation are adhered to;
- Include an interpretation of all available data and test results regarding the operation of the Project Site and all its impacts on the environment;
- Specify target dates for the implementation of the recommendations by the Project Company to achieve compliance;
- Contain recommendations regarding non-compliance or potential non-compliance and must specify target dates for the implementation of the recommendations by the Project Company and whether corrective action taken for the previous audit non conformities was adequate;
- Show monitoring results graphically and conduct trend analysis; and
- Show compliance and report on all matters pertained in conditions 17.4.2 of the Project's EA.
- Copies of all appropriate permits from the Department of Agriculture, Forestry and Fisheries (DAFF) for the removal of plants listed in the National Forests Act and from other relevant provincial departments will be made available and included in the first annual audit submitted to the DEA (Conditions 10.5 of the Project EA).

9.5 Environmental Audit Report for Construction

The Project Company must submit an Environmental Audit report to the DEA within 30 days after the completion of the construction phase and within 30 days of completion of the rehabilitation activities.

The environmental audit report needs to address all components listed in the EA and WML. The audit report should comprise of the following:

- Compiled by an independent environmental auditor;
- Indicate the date of the audit, the name of the auditor and the outcome of the audit;
- Evaluate compliance with the requirements of the approved EMPr and EA;
- Include measures to be implemented to attend to any non-compliances or degradation noted;
- Include copies of any approvals granted by other authorities relevant to the development for the reporting period;
- Highlight any outstanding environmental issues that must be addressed, along with recommendations for ensuring these issues are appropriately addressed;
- Include a copy of the EA and the approved EMPr;
- Include all documentation such as waste disposal certificates, hazardous waste landfill site licenses etc. pertaining to this authorisation; and
- Include evidence of adherence to the conditions of the EA and EMPr where relevant such as training records and attendance records.

9.6 Non-Compliance Record

Any non-compliance with:

- Final approved EMPr,
- final site layout approved by the DEA,
- the recommendations and conditions contained in the EA and WML,
- any other relevant environmental consents included in the Site Documentation; and
- any written permit/instructions issued by the CA will be treated as serious.

Liability rests with the EPC Contractor - for non-compliance with the aforementioned documentation. A penalties schedule will be developed prior to construction, by the CER in conjunction with the Project Company and be implemented in the instance of any non-compliance by any Contractor working on the Project Site. This will ensure that the Project Company has a means to manage their risk in respect of non-compliance by these Contractors.

10 Operational Phase

The Operational Environmental Management Programme (OEMPr) serves as the O&M Contractor and SE's guideline to ensure that sound environmental management practices are implemented during the operational and maintenance phase of the Project.

The OEMPr will specify the control measures that need to be implemented and maintained by the Contractor during the operation of the Project.

The operational phase of the Project commences when the Project starts evacuating power to the grid. Commissioning is considered to be a construction activity, however during this period both EPC and O&M Contractors will be on site and both CEMPr and OEMPr enforceable.

The operational and maintenance phase is expected to last between 20 and 30 years, dependent on the Power Purchase Agreement conditions and the availability of adequate technology and material to refurbish and/upgrade the Project, and all mitigation measures as listed below will be applicable for this time frame.

10.1 General Operational Management Activities

In accordance with the requirements of Condition 5.3 of the EA, the Project Company will submit an operational EMPr for the sewage works, if implemented, for approval by the DEA prior to operations of the sewage works.

The Project Company must give the DEA fourteen (14) days written notice that the operational phase will commence for the Project.

All registers and procedures as developed during the construction phase need to still be maintained on the Project Site and accessible. Any and all complaints need to be logged in the complaints register and brought under the attention of the CER. Procedures for the remediation of accidental spills and incidents still apply and need to be implemented upon the occurrence of the incident.

All operational management procedures as described in the Site Documentation need to be implemented. These reports will be accessible on site at all times. The Project Site is to be kept neat and tidy at all times – housekeeping should be in good standing order. All equipment and materials need to be stored according to the storage procedure developed by the CER.

10.2 Environmental Compliance & Competency Record

Prior to operation, the CER needs to develop and implement an environmental control/management system on site, whereby records will kept on all relevant components.

Records need to include the following:

10.2.1 Induction & Environmental Awareness Training register

It is the responsibility of the Contractor (EPC and O&M) to ensure that all staff undergo training and understand the requirements of the Site Documentation prior to construction and on a weekly basis thereafter. This allows staff to keep the environmental obligations in check.

Induction/training may take the form of toolbox talks, demonstrations, media or a written test – whereby the employees' understanding of issues pertaining to his/her job is explained and assessed. The degree of specialised training/induction is dependent on the function performed by the employee and will be determined by the CER. This training must be presented at the level of the employees.

If new personnel are appointed the induction must be done with them before they commence duties on site. All levels of management and employees need to undergo environmental training and training attendance record needs to be kept and available for review by the ECO during construction. Copies/samples of the toolbox talks/induction material also need to be available for review by the ECO. It is proposed that a graphic list of potentially dangerous animals be compiled and presented to all workers as part of site induction.

As a minimum, induction training should cover the following:

- Explanation of the importance and relevance of the EMPr;
- Definition and explanation of the mitigation measures that must be implemented when carrying certain activities on site.
- Discussion of the potential environmental impacts that operational activities may have.
- Roles and responsibilities of all employees.
- The emergency preparedness and response strategies and associated plans (this should be combined with this induction, but presented by the contractors Health and Safety Representative).
- Explanation and delineation of the site specific areas of importance i.e. no-go areas, etc., as well as training with regards to wildlife management.
- Explanation of the management structure of individuals responsible for matters pertaining to the EMPr.

10.2.2 Legal Register

A legal register needs to be onsite from the start of operation, accessible to any and all personnel whose actions may have a significant impact on the environment. It is the responsibility of the CER to ensure that the legal register is kept updated with regards to all relevant legislation.

10.2.3 Site Instructions

The Environmental Compliance Record will capture all site instruction issued by the CER that relates to the EMPr and any other environmental consents. These instructions will also be used for the issuing of stop-work-orders and or fines by the EM and CER.

10.2.4 Site Documentation

A copy of the Site Documentation has to be available on site and easily accessible to any and all persons working for and or on behalf of the O&M Contractor. Issues and conditions of the Site Documentation need to be explained to employees.

10.3 Policy Requirements

10.3.1 Community Health and Safety

As per IFC PS4, the Project Company and all Contractor working for and on behalf of the Project Company, will evaluate the risk and impacts to the health and safety of the affected communities during the project life-cycle and will establish preventive and control measures consistent with good international industry (GIIP), such as in the World Bank Group Environmental, Health and Safety Guidelines (EHS Guidelines) or other internationally recognized sources.

10.3.2 Grievance Mechanism

The aim of the grievance mechanism is to ensure that grievance/concerns raised by local landowners and or communities are addressed in a manner that is:

- Fair and equitable;
- Open and transparent; and
- Accountable and efficient.

A grievance mechanism only provides a platform of communication between the Project and the local community, it does not replace the rights of any individuals, entities or organizations to take legal action against the Project. This mechanism is however designed to address grievances received from the local community in order to avoid legal action.

Part of the Grievance Mechanism will be a Complaints Register, which needs to be on site at all times. This register has to be easily accessible to all stakeholders and I&AP's and made available for review to the EM and CER for all compliance investigations and scheduled environmental audits, if and when applicable. The Register has to illustrate what measures have been implemented/taken in order to address the complaint as well as indicate what the timeline was in resolving the complaint.

The Grievance Mechanism is included in Annexure G of this EMPr.

10.3.3 Method Statements

The O&M Contractor will provide Method Statements for review and acceptance by the EM and prior to work commencing on aspects of the Project deemed or identified to be of greater risk to the environment and/or which may not be covered in sufficient detail in the operational phase of the EMPr. Where practical and deemed necessary these Method Statements may be required to be endorsed as acceptable by the environmental representative of the Relevant Authority.

A Method Statement is a "live document" in that modifications are negotiated between the Contractor and the EM and/or the Project Company, as circumstances unfold. All Method Statements will form part of the construction phase Site Documentation and are subject to all terms and conditions contained within the construction phase EMPr.

Note that a Method Statement is a 'starting point' for understanding the nature of the intended actions to be carried out and allows for all parties to review and understand the procedures to be followed in order to minimise risk of harm to the environment.

Changes to, and adaptations of Method Statements can be implemented with the prior consent of all relevant parties.

A Method Statement describes the scope of the intended work in a step-by-step description in order for the Project Company and EM to understand the Contractors intentions. This will enable them to assist in identifying any mitigation measures required, which would minimize environmental impact during these tasks.

For each instance where it is requested that the Contractor submit a Method Statement to the satisfaction of the Project Company and EM, the format should clearly indicate the following:

- What - a brief description of the work to be undertaken;
- How - a detailed description of the process of work, methods and materials;
- Where - a description/sketch map of the locality of work (if applicable); and
- When - the sequencing of actions with due commencement dates and completion date estimates.
- Who – The person responsible for undertaking the works described in the Method Statement;
- Why – a description of why the activity is required.

10.3.4 Stakeholder Communication

During the operational phase a method statement will be employed by the EM addressing stakeholder engagement to specifically address issues such as transportation related impacts that may occur with the conveyance of large scale infrastructure, equipment or materials for the Project, any road closures, any water or services disruptions proposed. This Method Statement will be approved by the Project Company prior to operation and will be implemented by the relevant Contractor and Project Company dependent on the nature and scope of the required engagement.

Stakeholders will be informed of any large scale construction activities in advance and in writing Copies of all documents referring to stakeholder liaisons need to be kept on record (preferably signed) and maintained.

All communications will be made available in the event of a compliance investigation or relevant compliance audit.

10.3.5 Fire Management

Prior to construction the O&M Contractor will submit a Method Statement to the EM and Project Company for approval with respect to fire management. This Method Statement will make provision for the conditions of the National Veld and Forest Fire Act, Act No. 101 of 1998. The EPC Contractor will ensure that sufficient preventative and remedial measures are identified and readily available on site and will undertake to report as required to the Department of Agriculture, Forestry and Fisheries (DAFF). Fire management will be executed and undertaken by fully trained on site fire fighters.

Measures such as fire breaks will to be implemented and maintained throughout the construction period by the O&M Contractor in accordance with the National Veld and Forest Fire Act.

The Method Statement will define potential sources of fire and appropriate responses to these sources. The Contractor will furthermore ensure that a detailed response plan is included in the Method Statement which defines the emergency response procedure.

The Project Company shall play an active role in the local veld fire prevention and fire protection association for the region.

10.4 Dedicated Area Specifications

10.4.1 Site Access & Security

The site will be accessed via the existing access road constructed during construction as per the approval received from the Department of Roads and Public Works. Effective access control must be ensured by having the site fenced to a minimum height of 1.8 metres, with gates of the same height at all entrances. The entrances will at all times be monitored by staff. The gravel road will be maintained by the O&M Contractor to ensure it is in proper condition. The access gate to the facility must be manned at all operating hours. The gates must be locked when not in operation.

The O&M Contractor is responsible for the maintenance of the fence surrounding the Project Site. The fence needs to be inspected on a monthly basis and maintenance needs to be done when required. All repairs are to be done within the confines (boundary) of the Project Site.

The O&M Contractor will ensure effective access control to the centralised sewage treatment plant to prevent unauthorised entry. Weather-proof, durable and legible signs in at least three official languages applicable in the area displayed at each entrance to the site. The signs will indicate the risks involved in entering the site, and will also include the person responsible for the operation of the site.

All fences including the jackal fence (fence which is extended into the soil) erected during construction around the evaporation ponds, waste management infrastructure, waste areas will be checked weekly and repaired where necessary.

10.4.2 Workshop

When operating the workshop on the Project Site the same principles as during the construction phase would apply. No soil and land contamination would be tolerated and proper impermeable bunded areas with the required oil water separator mechanisms is required from the applicant.

When servicing equipment, drip trays must be used to collect the waste oil and other lubricants. Proof of disposal of spent/contaminated hydrocarbons at a duly authorised/license waste treatment or disposal facility needs to be kept on record.

All waste material must be disposed of in accordance with national, regional and local laws, regulations and by-laws. The waste material must be stored and removed off site in terms of the Minimum Requirements for the Handling, Classification and Disposal of Hazardous Waste and disposed of at an approved waste disposal site. Where possible, appropriate material shall be re-used or recycled. Proof of disposal at a duly authorised/license waste treatment or disposal facility needs to be kept on record.

Wash water must also be collected, in correlation with the recommendations of the SWMP, if the possibility exists that lubricants and solvents will be transported by the wash water.

10.4.3 Vehicle Service Area & Wash-Bay

This designated area will be assigned for the purpose of servicing and washing of operational vehicles – vehicles/equipment will only be serviced within this area. This area has to have an impermeable surface, and be enclosed. The area has to be equipped with a drainage system – whereby the spilled hydrocarbons are channelled into a sump, to be treated or gathered for disposal at a licensed hazardous waste disposal site. All vehicles / equipment need to be kept in good working order to ensure that there are no oil/fuel leakages. Drip trays will be used during vehicle servicing at all times. Emergency spill response kits need to be on site at all times – and all personnel needs to have a complete understanding of their function and how to use them.

10.4.4 Ablution Facilities

Washing and acts of excretion/urination is not permitted anywhere on site, except within the facilities provided. The O&M Contractor will ensure that these facilities are maintained on a biweekly basis to maintain a good hygiene status. Toilet paper will be provided by the O&M Contractor. The discharge of any other materials and or waste within the sanitation system will be prohibited. Toilets will be secured and provided with a closing mechanism. During operations staff will be utilizing the proper ablution and sanitary facilities. These must be linked to the sewer treatment system which comprises of a modular sewage treatment plant with sufficient capacity to process all the sewage generated on the plant.

10.4.5 Change Rooms

Changing rooms will be clearly marked for each gender.

10.4.6 Waste Disposal Facility Operation and Development

The O&M Contractor will minimise the generation of hazardous and non-hazardous waste materials. Where the generation cannot be avoided, the Contractor will reduce the generation of waste, and recover and reuse waste in a manner that is safe for human health and the environment. Where the waste cannot be recovered or reused, the Contractor will treat or

dispose of it in an environmentally sound manner. An appropriately bunded area will be demarcated and designed to contain general waste in designated bins. This area will be included in the O&M's site layout plan to be approved by the SE, in the event any changes or amendments are required. The amendment of the site layout plan will be subject to an amendment process as delineated by the NEMA EIA Regulations as promulgated in 2014. General waste must be sorted at source, where possible, and removed weekly to a licensed waste disposal site. Proof of disposal at a duly authorised/license waste treatment or disposal facility needs to be kept on record.

10.5 Material Storage & Handling

10.5.1 General Material Storage & Handling

The O&M Contractor will ensure that area designated for the delivery, handling and storage area, are clearly demarcated. Materials need to be protected from the elements by means of cover. Products will be stored in a covered area, on an impermeable surface to prevent spillage and wastage.

The O&M Contractor is responsible for ensuring that any materials delivery service providers and/or construction vehicle operators are informed of all procedures and restrictions (e.g. which access roads to use, "no go" areas, speed limits, dust control, etc) required to comply with the EMPr before they arrive at site and off load any materials. The O&M Contractor shall ensure that the service providers and/or construction vehicle operators are supervised during off-loading by someone with an adequate understanding of the requirements of the EMPr. The person must be authorised to take the necessary actions if the service providers do not adhere to the requirements of the EMPr.

10.5.2 Hazardous materials Handling & Storage

The O&M Contractor shall comply with all relevant national, regional and local legislation with regard to the transport, use and disposal of hazardous materials. The O&M Contractor shall keep a record of all hazardous materials that may be used on site, together with the storage, handling and disposal procedures of these materials. This information shall be made available to everyone on site prior to being used.

All materials classified as hazardous need to be stored in a locked storage area/container and access needs to be controlled. The classification, handling and treatment of all hazardous materials will conform to the latest edition of the document "Minimum Requirements for Handling, Classification and Disposal of Hazardous Waste, Waste Management Series, Department of Water Affairs and Forestry" or its successor.

The temporary storage area for spent hazardous materials needs to be enclosed by walls (bunded), under cover (roof) and located on an impermeable surface. The relevant Material Safety Data Sheets (MSDS) needs to be on site and accessible to all parties working with or near the hazardous materials. The O&M Contractor needs to keep record of all hazardous material on site. A Standard Operating Procedure (SOP) for the handling, storage and disposal of hazardous materials needs to be implemented and enforced by the CER. It is the responsibility of the O&M Contractor to ensure that all applicable SOP are drafted, signed off and implemented on site.

In the event of an emergency, all personnel working for and on behalf of the O&M Contractor need to be aware of and trained with regard to the Emergency Remediation Procedure.

10.5.3 Fuel (Petrol & Diesel) and Oil Storage

Fuel shall only be kept in designated fuel storage and refuelling areas, if required. This facility will be on an impermeable surface, enclosed with bund walls that can capture 110% of the fuel storage tanks' capacity. The bay also needs to be fitted with a hydrocarbon drainage system in the event of a leak or spill.

This area needs to be equipped with an emergency spill kit and all personnel needs to be trained in handling and clean-up of an incident or spill. No underground fuel or diesel storage is allowed – fuel will be transported to the site as and when required and stored in the temporary fuel storage tank.

Any leaking equipment shall be repaired immediately or removed from the site. In the event refuelling is required, this shall be carried out by means of pumps with hoses that enter the fuel receptacle, or gravity fed hoses fed from elevated tanks. The use of hand held funnels are strictly prohibited.

10.5.4 Fire Safety Measures

The O&M Contractor will make certain that the fire extinguishers are located practically across the Project Site, easily and readily accessible in the event of an accidental/uncontrolled fire. All site vehicles will have fire extinguishers. No open fires will be allowed on site.

The fuel and hazardous storage facilities will be subject to a separate method statement, specifically designed for the containment facility. This method statement will be approved by the EM and CER, once received from the relevant subcontractor. All staff will be adequately trained in the implementation of the conditions of the method statement.

10.5.5 Emergency Preparedness & Response Plan

The O&M Contractor will implement an Emergency Preparedness and Response Plan for the Project Site that provides a detailed explanation of what should be done in the various emergency situations. This plan is aimed to describe the different actions to be taken in emergencies, to describe principles and responsibilities for identification of potential for accidents; for response to emergency situations; for mitigating environmental impacts; and for restoring operations after accidents.

This plan will form part of the method statement submitted to the EM and CER by the O&M Contractor and known to all persons working on site and has to also provide emergency contact information. The plan will be reviewed annually and after each emergency and or accident to reflect changing conditions. The plan will reflect the conditions of IFC PS1 and amongst other the plan will include the following:

- Identification of areas where accidents and emergency situations may occur;
- communities and individuals that may be impacted;
- response procedure;
- provisions of equipment and resources;
- designation of responsibilities;
- communication, and
- periodic training to ensure effective response to potentially Affected Communities.

In addition, the Project Company will also assist and collaborate with affected communities, local government agencies and other relevant parties in their preparation to respond effectively to emergency situations especially when their participation and collaboration are necessary to respond to such emergency situations.

A copy of the Emergency Preparedness and Response Plan is included in Appendix L.

10.6 Waste Management

10.6.1 Solid & General Waste Management

The Project Site will be kept neat and tidy at all times. No littering by construction workers will be allowed, during the O&M period. Fines will be implemented for any and all employees working for and on behalf of the O&M Contractor found littering – this fine system will be implemented by the CER.

It is the responsibility of the O&M Contractor to provide adequate litter collection facilities for safe disposal at a licensed waste disposal sites.

Proof of disposal will be kept on site as part of the Site Documentation.

It is the responsibility of the O&M Contractor to implement a refuse control system which applies to all waste generated on site:

- Building rubble;
- Solid general waste;
- Cement bags and wrapping materials;
- Surplus food, packaging and organic waste; and
- Hazardous waste/materials.

Solid waste shall only be stored in the designated general waste storage area in covered, tip proof waste skips for disposal. The burying and/or burning of refuse/waste is at no time permitted on the Project Site. It is the responsibility of the O&M Contractor to ensure that there are enough refuse bins placed around site. These bins need to be closed, in order to protect the contents from the elements i.e. restrict leaching and emptied on regular basis. Temporary waste storage facilities need to be equipped with waste skips, to be emptied on a weekly basis. The waste skips need to be placed on an impermeable surface and enclosed.

The mixing of general waste and hazardous materials is not permitted – waste separation needs to occur before waste is placed in the waste skips.

The O&M Contractor is responsible for keeping the site neat and tidy – no refuse is to be found on site outside bins/skips allocated for these purposes.

The O&M Contractor is responsible for the removal and disposal of any and all general solid waste generated during the construction phase of the Project to the active workface of the licensed waste disposal site. Record of this has to be kept for audits.

10.6.2 Hazardous Waste Management

The temporary storage area for used hazardous materials needs to be enclosed by walls (bunded), under cover (roof) and located on an impermeable surface. All used hazardous material needs to be disposed of at a licensed hazardous waste disposal facility. The O&M Contractor will also have to keep record of all disposal certificates.

10.6.3 Effluent Management

All sewage/effluent water originating from the Project will be disposed of in such a manner as not to adversely affect the surrounding water sources (streams, rivers, wetlands, etc.). No wastewater shall be allowed to enter the drainage system.

Sanitary arrangements should be to the satisfaction of the O&M Contractor and EM, the local authorities and all applicable legal requirements.

It is essential that sewage be managed appropriately by means of a modular sewer treatment works and that all required authorisations are obtained from the local authorities in terms of the disposal of the effluent thereof in the evaporation ponds. The O&M Contractor is responsible for recording the volumes of sewage effluent disposed of in the evaporation ponds on a weekly/monthly basis and ensure that it complies with the volumes as agreed upon by the CA.

10.7 Biodiversity Management

10.7.1 Fauna & Flora Management and Monitoring

Biodiversity must be managed during the operational phase of the Project. This requires that invasive species need to be managed as per instruction by the EM, and no indigenous fauna or flora be removed from the Project Site without the relevant permits from the respective CA.

The jackal fence (fence which is extended into the soil) as erected around the evaporation ponds, waste management infrastructure, waste areas during construction will be regularly checked and maintained to prevent the movement of nocturnal burrowing species into these areas where they may be injured, drown or ingest hazardous substances.

Fences will be maintained in such a way as to create wildlife corridors or other measures to help ensure connectivity between the riparian habitats and ridges on the site, or connections between existing meta-populations.

The Project Site should be monitored for alien and invasive species during the operational phase as per the requirement set out in CARA. Exotic weeds and invaders that might establish on the re-vegetated areas should be controlled to allow the grasses to properly establish. Monitoring the potential spread of declared weeds and invasive alien vegetation to neighbouring land and protecting the agricultural resources and soil conservation works are regulated by the Conservation of Agricultural Resources Act, No. 43 of 1983 and should be addressed on a continuous basis.

The damage of flora outside the site boundary should be avoided at all times – if damage does occur it needs to be reported to the CER and EM for remediation. Employees are not allowed to trap and / or kill animals.

No fires are allowed on site – under any circumstances. Vegetation (grass and shrubs) need to be maintained and not removed unless absolutely required and approved by the relevant site representative.

The Contractor should compile and implement environmental monitoring programme, the aim of which should be ensuring long-term success of rehabilitation and prevention of environmental degradation. Environmental monitoring will be undertaken internally by a duly qualified ecologist, in order to ensure the compliance achieved with rehabilitation requirements are maintained.

10.7.2 Avifauna Management & Monitoring

Pre-construction bird monitoring was undertaken and findings of the monitoring revealed that in general the flight activity of priority species is relatively low.

During operational phase, it is required that the O&M Contractor manage (consider wire mesh if feasible) the evaporation ponds and any other attenuation ponds with waste water to prevent any white-backed vultures, blue cranes, flamingos and other water birds entering or using the water at all, where feasible. The mesh will need to be monitored on a daily basis for breaks and maintained as required.

The Project Company will furthermore commence with post construction monitoring, by a duly qualified ecologist (or ornithologist) in order to determine if any displacement has occurred and document any changes in avifaunal behaviour around the Project Site, but will also include a methodical carcass search program to detect carcasses between heliostats and in the vicinity of the Project's tower.

10.8 Water Management & Monitoring

10.8.1 Stormwater Management

The facility operator will be responsible for the maintenance of the stormwater management system as designed and installed by the EPC Contractor during the construction phase. This is especially crucial for the workshop and evaporation pond areas. It is necessary that surface runoff be managed appropriately in order to simultaneously address erosion control measures. The stormwater and drainage system needs to be cleaned of debris on a bi-weekly basis.

10.8.2 Evaporation Ponds

Proper maintenance and inspection of the ponds are required in accordance with the conditions highlighted in the WML, EA and the IWUL.

10.8.3 Potable Water

The O&M Contractor will ensure potable water will be available at readily accessible points on site. Potable water systems must be inspected for leakages on monthly basis' to ensure no water is wasted.

10.8.4 Waste Water Treatment Facility- If implemented

A water quality monitoring programme for the WWTW will be implemented by the O&M Contractor as per the conditions of the WML, EA and WUL.

An emergency preparedness plan will be drafted for approval by the EM and Project Company for implementation, and reviewed on an annual basis pertaining to the following components (but not limited to):

- Fire on site;
- Spillage;
- Natural disasters;
- Industrial action; and
- Contact details of emergency services such as police, ambulance and emergency centres.

The WWTW needs to be operated by the O&M Contractor in accordance with the EMS implemented and approved by the Project Company during the construction phase.

Access to the WWTW and evaporation ponds need to be restricted and clear and concise signage implemented. The signage must clearly indicate the risks involved upon entering the area.

10.9 Soil Erosion Management

Adapt, implement and maintain the stormwater management and run-off control system to collect and safely disseminate water where necessary from surfaces during all phases of the Project, without causing downstream erosion.

Maintain erosion control measures implemented during the construction phase (i.e. run-off attenuation on slopes, silt fences, stormwater catch-pits, and shade nets).

Continuous rehabilitation of disturbance areas should the previous attempt be unsuccessful.

Utilise only roads permitted and constructed for the Project.

10.10 Nuisance Management

The EM is to ensure that the following nuisance control measures are to be implemented and maintained throughout the lifespan of the operation.

10.10.1 Dust

Dust control measures need to be implemented during the operational phase. Surface roads must be maintained adequately for all weather conditions.

The O&M Contractor has to ensure that all vehicles/machinery abide by the traffic regulations and that the speed limit is enforced.

Un-surfaced roads must be regularly graded. In addition to this measure, the O&M Contractor has to implement a dust suppression programme i.e. watering or chemical stabilisation in order to manage the dust generated from soil stockpiles reserved for cover material.

10.10.2 Emissions

All equipment and vehicles must be maintained in good working condition.

10.10.3 Visual Impact

As per the conditions of the CEMPr the visual impact will be mitigated by means of vegetation, where found feasible and practicable. It is the responsibility off the O&M Contractor to ensure that the vegetation around the site is well maintained. Conditions pertaining to lighting as defined in the CAA Permit and as implemented during the construction phase need to be upheld and adhered to.

Adequate lighting will be installed around buildings. Lighting around buildings will be fitted white day- night switches to minimise electricity usage. Night markings for the tower require medium intensity type B (20,000 candela-flashing) at the top of the structure. Floodlights are to be installed in order to illuminate the tower as per the CAA Permit conditions.

10.10.4 Noise Management

Noise pollution emanating from the facility during operation will not generate excessive noise but where possible, very noisy activities should not take place at night (between the hours of 20h00 to 06h00). It must be ensured with the washing of the heliostats at night that noise levels from the high-pressure hose system (compressor) on the trucks are minimised.

10.11 Social & Socio-Economic

During operations the impact proposed will be far less prominent that during construction, as the large number of people are removed from the mix. During operations the Project Company can aim to improve its positive socio economic and social impact that the Project will generate by implementing the following measures:

- Where possible a policy needs to be implemented for the procurement of local services and goods from surrounding communities and towns.
- Where possible, local labour should be considered for employment so as to increase the positive impact on the local economy.
- As far as possible, local small and medium enterprises should be approached to investigate the opportunities for supply inputs required for the maintenance and operation of the Facility.

The Project Company has made clear and concise commitments in its Bid Response as part of the Department of Energy's Renewable Energy Independent Power Producers Procurement Programme with respect to Socio Economic and Economic Development targets. These targets form part of the contractual agreement signed between the Department of Energy and the Project Company and will be strictly adhered to.

11 Auditing During the Operational Phase

11.1 Internal Audits

Internal auditing will be conducted annually by the Project Company. Official audit reports must be compiled by the relevant auditor and the findings of these audits must be available to the external auditor and the authorities, where applicable. Non-conformances raised during audits must be addressed and closed-out to ensure further compliance.

All records and audit reports for the Project during operations must adhere to the conditions defined in the EA, WML, WUL and all other relevant environmental consents as provided for under the Project Site Documentation.

11.2 External Audits

The Project Company will appoint an independent external auditor to audit the site annually and this auditor must compile an audit report documenting the findings of the audit. Findings raised in audits must be addressed and corrective actions included for auditing in quarterly compliance audits. The external audit report must be submitted by the license holder to the CA on an annual basis, and within 30 days from the date on which the external auditor finalised the audit.

The external auditor team must consist of the following persons:

- An Environmental Assessment Practitioner or experienced auditor
- A Professional Registered Engineer.

The external audit report must:

- Specifically state whether the Project is in compliance with the Site Documentation, with specific reference to whether the conditions of the EA, WML, WUL and all other environmental permits and consents contained in the Site Documentation are adhered to;
- Include an interpretation of all available data and test results regarding the operation of the Project Site and all its impacts on the environment;
- Specify target dates for the implementation of the recommendations by the Project Company to achieve compliance;
- Contain recommendations regarding non-compliance or potential non-compliance and must specify target dates for the implementation of the recommendations by the Project Company and whether corrective action taken for the previous audit non conformities was adequate;
- Show monitoring results graphically and conduct trend analysis; and
- Show compliance and report on all matters pertained in conditions 17.4.2 of the Project's EA.

11.3 Operation Specific Auditing and Reporting

The Project Company will develop and implement a Monitoring and Measurement Plan that must include, but not be limited to:

11.3.1 Waste Management Practices

This management plan will set out the proposed monitoring plan for all waste streams generated during operations. Records held will include:

- Tonnage generated;
- Tonnage disposed of;
- Tonnage treated or reclaimed;
- Waybill from licensed landfill site; and
- Waybill from licensed hazardous waste handler/treatment or disposal facility.

11.3.2 Water Management

10.3.2.1 Surface Water

Surface water monitoring will be performed in accordance with the specifications as determined and agreed upon by the CA and ECO.

10.3.2.1 Groundwater

Water quality monitoring programme for the WWTW and evaporation ponds should include the following:

- Timeframes for monitoring of the discharge water;
- Parameters to be monitored; and
- Receiving water quality requirements as approved by DWS.

All hydrogeological monitoring data will be evaluated bi-annually by a qualified hydro-geologist and the report generated submitted as part of the annual WWTW audit.

Please note: *Water quality monitoring will be undertaken in accordance with the frequency stipulated and parameters outlined within the Site Documentation.*

11.3.3 Fauna & Flora Management

The Project Company will implement an environmental monitoring programme, the aim of which should be ensuring long-term success of rehabilitation and prevention of environmental

degradation. Environmental monitoring must be conducted at least twice per year (summer, winter) by a duly qualified ecologist.

11.3.4 Avifaunal monitoring

The aim of this Monitoring Protocol will be to determine displacement and document any changes in avifaunal behaviour around the Project Site, but will also include a methodical carcass search program to detect carcasses between heliostats and in the vicinity of the Project's tower.

Post-construction monitoring will consist of a) habitat classification, b) quantifying bird numbers and movements (replicating baseline data collection), and c) quantifying bird mortalities.

The duration and scope of post-construction monitoring will be informed by the outcomes of the previous year's monitoring, and will be reviewed annually.

Post-construction monitoring of bird abundance and movements and fatality surveys will span a minimum of two years, but it may be necessary to increase parts of this depending on the risks related to the particular site and species involved.

12 Decommissioning phase

The Project infrastructure which will be utilised for the proposed ACWA Power SolarReserve Redstone Solar Thermal Power Project is expected to have a lifespan of 20 to 25 years (with maintenance). Equipment associated with the Project would only be decommissioned once it has reached the end of its economic life. It is most likely that decommissioning activities of the infrastructure of the facility would comprise the disassembly and replacement of the heliostat field and other associated infrastructures with more appropriate technology or alternatively infrastructure, available at that time.

The relevant mitigation measures contained under the construction section should be applied during decommissioning and therefore is not repeated in this section. It must be noted that decommissioning activities will need to be undertaken in accordance with the relevant legislation applicable at that time, which may require this section of the EMPr to be revisited and amended.

12.1 Site Preparation

Site preparation activities will include confirming the integrity of the access to the Project Site to accommodate required abnormal load equipment and lifting cranes, preparation of the site (e.g. lay down areas, construction platform) and the mobilisation of construction equipment.

12.2 Disassemble and Remove Existing Components

The heliostats and central receiver tower sections of the Project will be disassembled once it reaches the end of its economic lifespan. A large crane would be required for disassembling the tower. Once disassembled, the components will be reused, recycled, or disposed of in accordance with regulatory requirements (NEMA / NEM:WA). All Infrastructure would be considered reusable or recyclable from the Facility.

12.3 Rehabilitation of the Site

In order to minimise the extent of rehabilitation activities required during the decommissioning phase, the Project Company must ensure that constant effort is applied to rehabilitation activities throughout the construction, operation and maintenance phases of the project.

In decommissioning of the facility the Project Company must ensure that:

- All areas that are not already vegetated are vegetated as soon as possible after operation ceases with species appropriate to the area.
- Any fauna encountered during decommission should be removed to safety by a suitably qualified person.
- All structures, foundations and sealed areas are demolished, removed and waste material disposed of at an appropriately licensed waste disposal site.
- All access/service roads not required to be retained by landowners are closed and fully rehabilitated.

- All vehicles to adhere to low speed limits (40km/h max) on the site, to reduce risk of faunal collisions as well as reduce dust.
- All disturbed areas are compacted, sloped and contoured to ensure drainage and runoff and to minimise the risk of erosion.
- All rehabilitated areas are monitored for erosion.
- Components of the facility are removed from the site and disposed of appropriately.

13 Summary

The mitigation measures identified in this EMPr will be strictly adhered to by any and all parties working for and on behalf of the Project Company. Guidelines with respect to environmental monitoring throughout the construction and operational phases of the Project will be implemented in order to minimise the environmental impacts associated with the Project.

The EMPr will facilitate appropriate environmental input during construction activities as well as the future operational activities associated with the Project. The management measures defined in the EMPr will aim to promote positive environmental consequences and reduce adverse environmental impacts of the Project.

Throughout the period of construction and operational periods the Contractors shall restrict all activities to within the designated areas on the approved site layout plan. Any relaxation or modification of the construction layout plan is to be approved in accordance to the NEMA EIA Regulations as promulgated in 2014, or subsequent hereto.

This EMPr is a dynamic document which will be updated and revised as required. Amendments made to this document must be submitted to the Department for acceptance prior to implementation, and an application for amendment as per the relevant EIA Regulations submitted, where relevant.

This EMPr will be included in all contract documentation associated with the Project. The content of this EMPr is relevant and binding on the activities associated with the pre-construction, construction and operation & maintenance of the Project.

Appendix A

Environmental Authorisation and amendments

environmental affairs
Department:
Environmental Affairs
REPUBLIC OF SOUTH AFRICA
Private Bag X 447 · PRETORIA · 0001 · Fedsure Building · 315 Pretorius Street · PRETORIA
Tel (+ 27 12) 310 3911 · Fax (+ 2712) 322 2682

NEAS Reference: DEA/EIA/0000765/2011
DEA Reference: 12/12/20/2316
Enquiries: Masina Litsoane
Telephone: 012-395-1778 **Fax:** 012-320-7539 **E-mail:** MLitsoane@environment.gov.za

Mr. Terence Govender
SolarReserve SA (Pty) Ltd
Office L6 B-1, 6th Floor SinoSteel Plaza
159 Rivonia Road
SANDTON
2191

Fax no: (011) 784 7549

PER FACSIMILE / MAIL

Dear Mr Govender

APPLICATION FOR ENVIRONMENTAL AUTHORISATION IN TERMS OF THE NATIONAL ENVIRONMENTAL MANAGEMENT ACT, 2010: GN R.544, GN R.545 AND GN R546: HUMANSRUS SOLAR THERMAL ENERGY POWER PLANT ON THE FARM 469 HAY RD, NORTHERN CAPE PROVINCE

With reference to the above application, please be advised that the Department has decided to partly grant authorisation. The environmental authorisation (EA) and reasons for the decision are attached herewith.

In terms of regulation 10(2) of the Environmental Impact Assessment Regulations, 2010 (the Regulations), you are instructed to notify all registered interested and affected parties, in writing and within 12 (twelve) days of the date of the EA, of the Department's decision in respect of your application as well as the provisions regarding the submission of appeals that are contained in the Regulations.

Your attention is drawn to Chapter 7 of the Regulations, which prescribes the appeal procedure to be followed. This procedure is summarised in the attached document. Kindly include a copy of this document with the letter of notification to interested and affected parties.

Should the applicant or any other party wish to appeal any aspect of the decision a notice of intention to appeal must be lodged by all prospective appellants with the Minister, within 20 days of the date of the EA, by means of one of the following methods:

By facsimile: 012 320 7561;
By post: Private Bag X447,
Pretoria, 0001; or

By hand: 2nd Floor, Fedsure Building, North Tower,
Cnr. Van der Walt and Pretorius Streets,
Pretoria.

If the applicant wishes to lodge an appeal, it must also serve a copy of the notice of intention to appeal on all registered interested and affected parties as well as a notice indicating where, and for what period, the appeal submission will be available for inspection, should you intend to submit an appeal.

Please include the Department *(Attention: Director: Environmental Impact Evaluation)* in the list of interested and affected parties, notified through your notification letter to interested and affected parties, for record purposes.

Appeals must be submitted in writing to:

Mr T Zwane, Senior Legal Administration Officer (Appeals) of this Department at the above mentioned addresses or fax number. Mr Zwane can also be contacted at:

Tel: 012-310-3929
Email: tzwane@environment.gov.za

The authorised activities shall not commence within twenty (20) days of the date of signature of the authorisation. Further, please note that the Minister may, on receipt of appeals against the authorisation or conditions thereof suspend the authorisation pending the outcome of the appeals procedure.

Yours sincerely

Mr Mark Gordon
Chief Director: Integrated Environmental Authorisations
Department of Environmental Affairs
Date: 6 August 2012

CC:	Ms L. Rautenbach	WorleyParsons RSA	Fax: 012-460-9978
	Mr S. Henge	Tsantsabane Local Municipality	Fax: 053-313-1602
	Mr T Zwane	Appeals Authority (DEA)	Fax: 012-320-7561

APPEALS PROCEDURE IN TERMS OF CHAPTER 7 OF THE NEMA EIA REGULATIONS, 2010 (THE REGULATIONS) AS PER GN R.543 OF 2010 TO BE FOLLOWED BY THE APPLICANT AND INTERESTED AND AFFECTED PARTIES UPON RECEIPT OF NOTIFICATION OF AN ENVIRONMENTAL AUTHORISATION (EA)

APPLICANT	INTERESTED AND AFFECTED PARTIES (IAPs)
1. Receive EA from the relevant Competent Authority (the Department of Environmental Affairs [DEA]).	1. Receive EA from Applicant/Consultant.
2. Within 12 days of date of the EA notify all IAPs of the EA and draw their attention to their right to appeal against the EA in terms of Chapter 7 of the Regulations.	2. N/A.
3. If you want to appeal against the EA, submit a notice of intention to appeal within 20 days of the date of the EA with the Minister of Water and Environmental Affairs (the Minister).	3. If you want to appeal against the EA, submit a notice of intention to appeal within 20 days of the date of the EA. with the Minister of Water and Environmental Affairs (the Minister).
4. After having submitted your notice of intention to appeal to the Minister, provide each registered IAP with a copy of the notice of intention to appeal within 10 days of lodging the notice.	4. After having submitted your notice of intention to appeal to the Minister, provide the applicant with a copy of the notice of intention to appeal within 10 days of lodging the notice.
5. The Applicant must also serve on each IAP: • a notice indicating where and for what period the appeal submission will be available for inspection.	5. Appellant must also serve on the Applicant within 10 days of lodging the notice, • a notice indicating where and for what period the appeal submission will be available for inspection by the applicant.
6. The appeal must be submitted in writing to the Minister within 30 days after the lapsing of the period of 20 days provided for the lodging of the notice of intention to appeal.	6. The appeal must be submitted to the Minister within 30 days after the lapsing of the period of 20 days provided for the lodging of the notice of intention to appeal.
7. Any IAP who received a notice of intention to appeal may submit a responding statement to that appeal to the Minister within 30 days from the date that the appeal submission was lodged with the Minister.	7. An Applicant who received notice of intention to may submit a responding statement to the appeal to the Minister within 30 days from the date that the appeal submission was lodged with the Minister.

NOTES:

1. **An appeal against a decision must be lodged with:-**
   a) the Minister of Water and Environmental Affairs if the decision was issued by the Director- General of the Department of Environmental Affairs (or another official) acting in his/ her capacity as the delegated Competent Authority;
   b) the Minister of Justice and Constitutional Development if the applicant is the Department of Water Affairs and the decision was issued by the Director- General of the Department of Environmental Affairs (or another official) acting in his/ her capacity as the delegated Competent Authority;

2. **An appeal lodged with:-**
   a) the Minister of Water and Environmental Affairs must be submitted to the Department of Environmental Affairs;
   b) the Minister of Justice and Constitutional Development must be submitted to the Department of Environmental Affairs;

3. **An appeal must be:-**
   a) submitted in writing;
   b) accompanied by:
   - a statement setting out the grounds of appeal;
   - supporting documentation which is referred to in the appeal; and
   - a statement that the appellant has complied with regulation 62 (2) or (3) together with copies of the notices referred to in regulation 62.

environmental affairs
Department:
Environmental Affairs
REPUBLIC OF SOUTH AFRICA

Integrated Environmental Authorisation Issued in terms of

The National Environmental Management Act, 1998 and the Environmental Impact Assessment Regulations 2010

and

The National Environmental Management: Waste Act, 2008 and Government Notice 718 of 2009

Humansrus Concentrated Solar Power Facility on the Farm 469 Hay RD within Tsantsabane, Northern Cape Province

Siyanda District Municipality

Authorisation register number:	*12/12/20/2316*
Last amended:	*First Issue*
Holder of integrated authorisation:	*SolarReserve SA (Pty) Ltd*
Location of activities:	*NORTHERN CAPE PROVINCE: On the Farm 469 Hay RD, within Tsantsabane Local Municipality*

This authorisation does not negate the holder of the authorisation's responsibility to comply with any other statutory requirements that may be applicable to the undertaking of the activity.

1. DECISIONS

The Department is satisfied, on the basis of information available to it and subject to compliance with the conditions of this integrated environmental authorisation ("the environmental authorisation") that the applicant should be authorised to undertake the NEMA EIA and NEMWA listed activities specified below.

Details regarding the basis on which the Department reached this decision are set out in Annexure "I" to this environmental authorisation.

2. NEMA EIA AND NEMWA ACTIVITIES AUTHORISED

By virtue of the powers conferred on it by NEMA, the NEMA EIA Regulations, 2010, NEMWA and Government Notice 718 of 3 July 2009 the Department hereby authorises –

SOLARRESERVE SA (PTY) LTD

with the following contact details –

Mr. Terence Govender
SolarReserve SA (Pty) Ltd
Office L6 B-1, 6th Floor SinoSteel Plaza
159 Rivonia Road
SANDTON
2191

Tel: (083) 449 0433
Fax: (011) 784 7549
E-mail: Terence.Govender@solarreserve.com

to undertake the following activities (hereafter referred to as "the activities"):

Notice number	Activity number	Activity description (as per the relevant notice)
GN R. 544	9	The construction of facilities or infrastructure exceeding 1 000 metres in length for the bulk transportation of water, sewage, sewage or storm water –

		i. With an internal diameter of 0.36 metres or more; ii. Or with a peak throughput of 120 litres per second or more Excluding where: a. Such facilities or infrastructure are for bulk transportation of water, sewage or storm water drainage inside a road reserve; or b. Where such construction will occur within urban areas but further than 32 metres from the water course, measured from the edge of the water course.
GN R. 544	10	The construction of facilities or infrastructure for the transmission and distribution of electricity – i. outside urban areas or industrial complexes with a capacity of more than 33 but less than 275 kilovolts.
GN R. 544	11	The construction of: (ii) channels; **(iii)** bridges; **(v)** weirs; **(x)** buildings exceeding 50 square metres in size; or **(xi)** infrastructure or structures covering 50 square metres or more Where such construction occurs **within a watercourse or within 32 metres of a watercourse,** measured from the edge of a watercourse, excluding where such construction will occur behind the development setback line.
GN R. 544	12	The construction of facilities or infrastructure for the off-stream storage of water, including dams and reservoirs, with a combined capacity of 50000 cubic metres or more, unless such storage falls within the ambit of activity 19 of Notice 545 of 2010
GN R. 544	22	The construction of a road, outside urban areas, (ii) where no reserve exists where the road is wider than 8m
GN R. 545	1	The construction of facilities or infrastructure for the generation of electricity where the electricity output is 20MW or more.
GN R. 545	3	Construction of facilities or infrastructure for the storage and handling of dangerous goods, where such storage occurs in containers with a combined capacity of more than 500 cubic metres
GN R. 545	15	Physical alternation of undeveloped, vacant or derelict land to (ii) residential, retail, commercial, recreational, industrial or institutional use where the total to be transformed is 20ha or more.
GN R. 546	2	The construction of reservoirs for bulk water supply with a capacity of more than 250 cubic metres.

69

		a) In Northern Cape Province i. Outside urban areas, in: (bb) Sensitive areas as identified in an environmental management framework as contemplated in Chapter 5 of the Act and as adopted by the competent authority.
GN R. 546	4	The construction of a road wider than 4 metres with a reserve less than 13.5 metres – a) In Northern Cape: ii. Outside urban areas in: (cc) Sensitive areas as identified in an environmental management framework as contemplated in Chapter 5 of the Act and as adopted by the competent authority (ee) Critical biodiversity areas as identified in systematic biodiversity plans adopted by the competent authority or in bioregional plans.
GN R. 546	10	The construction of facilities or infrastructure for the storage, or storage and handling of a dangerous good, where such storage occurs in containers with a combined capacity of 30 cubic metres but not exceeding 80 cubic metres. a) In Northern Cape Province (ii) Outside urban areas in: (cc) Sensitive areas as identified in an environmental management framework as contemplated in Chapter 5 of the Act and as adopted by the competent authority (ee) Critical biodiversity areas as identified in systematic biodiversity plans adopted by the competent authority or in bioregional plans.
GN R. 546	12	The clearance of an area of 300m² or more of vegetation where 75% or more of the vegetative cover constitutes indigenous vegetation. Within any critically endangered or endangered ecosystem listed in terms of section 52 of the NEMBA or prior to the publication of such a list, with an area that has been identified as critically endangered in the National Spatial Biodiversity Assessment 2004. Within critical biodiversity areas identified in bioregional plans.
GN R. 546	13	The clearance of an area of 1 hectare or more of vegetation where 75% or more of the vegetative cover constitutes vegetation, except

		where such removal of vegetation is required for: 1) The undertaking of a process or activity included in the list of waste management activities published in terms of section 19 of the National Environmental Management : Waste Act, 2008 (Act no.59 of 2008) in which case the activity is regarded to be excluded from this list. (a) Critical biodiversity areas and ecological support areas as identified in the systematic biodiversity plans adopted by the competent authority. (c) In Northern Cape Province ii. Outside urban areas, in: (cc) Sensitive areas as identified in an environmental management framework as contemplated in Chapter 5 of the Act and as adopted by the competent authority
GN R. 546	14	The clearance of an area of 1 hectare or more of vegetation where 75% or more of the vegetative cover constitutes vegetation, except where such removal of vegetation is required for: 2) The undertaking of a process or activity included in the list of waste management activities published in terms of section 19 of the National Environmental Management : Waste Act, 2008 (Act no.59 of 2008) in which case the activity is regarded to be excluded from this list. (a) In Northern Cape Province (i) Outside urban areas
GN R. 546	16	The construction of: i. Buildings with a footprint exceeding 10 square metres in size, or ii. Infrastructure covering 10 square metres or more Where such construction occurs within a watercourse or within 32 metres of a watercourse, measured from the edge of a watercourse, excluding where such construction will occur behind the development setback line. a) In Northern Cape Province (ii) Outside urban area in: (cc) Sensitive areas as identified in an environmental

		management framework as contemplated in Chapter 5 of the Act and as adopted by the competent authority (ee) Critical biodiversity areas as identified in systematic biodiversity plans adopted by the competent authority or in bioregional plans.
GN 718 Category B	1	The storage including the temporary storage of hazardous waste in lagoons
GN 718 Category B	5	The treatment of hazardous waste using any form of treatment regardless of the size or capacity of such a facility to treat such waste;
GN 718 Category B	6	The treatment of hazardous waste in lagoons.
GN 718 Category B	7	The treatment of effluent, wastewater or sewage with an annual throughput capacity of 15 000 cubic metres or more.
GN 718 Category B	11	The construction of facilities for activities listed in Category B of this schedule (not in isolation to associated activity).

as described in the Environmental Impact Report (EIR) dated January 2012 and Addendum Report dated March 2012 at:

Alternative S1	Latitude	Longitude
Humansrus CSP (Centre co-ordinates of the site)	28°17'31.95"S	23°22'21.17"E

- for the establishment of a 100MW Concentrated Solar Power Facility (CSP) and associated infrastructure on the Farm 469 Hay Rd to be known as the Humansrus CSP, within Tsantsabane Local Municipality hereafter referred to as "the property".

The facility comprises of the following:

- A collector field consisting of approximately between 10 300 and 17 500 dual-axis tracking heliostats, each approximately between 64 m² - 116 m², providing approximately 1 200 000m² of reflective surface area;
- An approximately 200 meter tall slip-form concrete tower and thermal receiver rated at approximately 565 MW thermal (MWt);
- A thermal to electric power block with an approximately 115 MW reheat and multiple extractions high temperature subcritical steam turbine and generator;

- Two molten salt thermal storage tanks;
- An air-cooled condenser and/or a cooling tower for the steam cycle in order to minimise the consumption of water;
- Water reticulation and purification works. This includes water reticulation from the Sedibeng Bulk Water Supply Pipeline for industrial water use, and a water treatment and purification system to provide water for both domestic and process use;
- Sewer reticulation and treatment works;
- An evaporation pond consisting of three compartments with a combined area of approximately 8.0 ha, to completely contain all rejected water from the water treatment system and the steam cycle;
- Roads and storm water infrastructure;
- Two liquid gas or diesel auxiliary burners for start-up;
- Two emergency diesel generators;
- Sub-station and switchyard of approximately 100 m x 100 m containing transformers and associated structures;
- Approximately 8km overhead power lines connecting to the Eskom grid;
- Construction camp - accommodation and associated facilities for approximately 600 people;
- Administrative and office buildings;
- Visitors centre;
- Equipment and materials lay down area;
- Assembly Plant;
- Concrete batching plant;
- Vehicle workshops and wash bays;
- Fuel storage area;
- Temporary general waste storage facility; and
- Hazardous material storage facility.

The total footprint for the facility is 800ha.

3. SCOPE OF AUTHORISATION

3.1 Authorisation is granted for the development of Humansrus CSP and associated infrastructure with site co-ordinates as indicated above. The establishment of a CSP with power tower

system (Alternative 2), hybrid wet/dry cooling system (Alternative 3) and molten salt heat transfer medium is hereby approved.

3.2 Authorisation of the activities is subject to the conditions contained in this authorisation, which form part of the environmental authorisation and are binding on the holder of the environmental authorisation.

3.3 The Department shall by written notice to the holder of an environmental authorisation suspend with immediate effect an environmental authorisation if suspension of the authorisation is necessary to prevent harm or further harm to the environment.

3.4 The activities must commence within a period of three (3) years from the date of issue. If commencement of the activity does not occur within that period, the environmental authorisation lapses and a new application for an environmental authorisation must be made for the activities to be undertaken. Commencement with one activity listed in terms of this authorisation constitutes commencement of all authorised activities.

3.5 The holder of the environmental authorisation shall be responsible for ensuring compliance with the conditions contained in this environmental authorisation. This includes any person acting on the holder's behalf, including but not limited to, an agent, servant, contractor, sub-contractor, employee, consultant or person rendering a service to the holder of the authorisation.

3.6 Any changes to, or deviations from, the project description set out in this authorisation must follow the amendment processes as prescribed in Chapter 4 (Parts 1-3) of the NEMA EIA Regulations, 2010 and be approved, in writing, by the Department before such changes or deviations may be effected. In assessing whether to grant such approval or not, the Department may request such information as it deems necessary to evaluate the significance and impacts of such changes or deviations and it may be necessary for the holder of the authorisation to apply for further authorisation in terms of the regulations.

4. NOTIFICATION OF AUTHORISATION AND RIGHT TO APPEAL

4.1 The holder of the authorisation must notify every registered interested and affected party, in writing and within 12 (twelve) calendar days of the date of this environmental authorisation, of the decision to authorise the activity.

4.2 The notification referred to must –

4.2.1 specify the date on which the authorisation was issued;

4.2.2 inform the interested and affected party of the appeal procedure provided for in Chapter 7 of the Environmental Impact Assessment (EIA) Regulations, 2010;

4.2.3 advise the interested and affected party that a copy of the authorisation will be furnished on request; and

4.2.4 give the reasons for the decision.

4.3 The holder of the authorisation must publish a notice –

4.3.1 informing interested and affected parties of the decision;

4.3.2 informing interested and affected parties where the decision can be accessed; and

4.3.3 drawing the attention of interested and affected parties to the fact that an appeal may be lodged against this decision in the newspaper(s) contemplated and used in terms of regulation 54(2)(c) and (d) and which newspaper was used for the placing of advertisements as part of the public participation process.

4.4 The holder of the environmental authorisation must, in writing, within 10 days of the date of the decision on the application –

(a) notify all registered interested and affected parties of –

(i) the outcome of the application; and

(j) the reasons for the decision;

(b) draw the attention of all registered interested and affected parties to the fact that an appeal may be lodged against the decision in terms of Chapter 7 of the NEMA EIA Regulations, 2006 if such appeal is available in the circumstances of the decision;

(c) draw the attention of all interested and affected parties to the manner in which they can access the decision; and

(d) publish a notice –

(i) informing interested and affected parties of the decision;

(ii) informing interested and affected parties where the decision can be accessed; and

(iii) drawing the attention of interested and affected parties to the fact that an appeal may be lodged against the decision in terms of Chapter 7 of the NEMA EIA Regulations, 2006, if such appeal is available under the circumstances of the decision;

in the newspapers contemplated in regulation 54(2)(c) and (d) of the NEMA EIA Regulations, 2006 and which newspaper was used for the placing of advertisements as part of the public participation process.

5. MANAGEMENT OF THE ACTIVITY

5.1 The Environmental Management Plan (EMP) dated January 2012 for the construction and operation of the CSP, submitted as part of application for EA, must be amended to include

measures as dictated by the final site lay-out plan and micro-siting. The final EMP must be submitted to the Department for written approval prior to commencement of the activity. The recommendations and mitigation measures recorded in the EIR dated January 2012 must be incorporated as part of the EMP. Once approved, the EMP must be implemented and adhered to.

5.2 The amended EMP must also include the following:

5.2.1 All recommendations and mitigation measures recorded in the EIR dated February 2012.

5.2.2 The requirements and conditions of this authorisation.

5.3 The applicant must compile an operational EMP for the operational phase of the sewage works for approval by this Department before operation may begin.

5.4 The operation EMP for the sewage works must include among others the following:

5.4.1 A water quality monitoring program for the sewage works, including the timeframes for monitoring of the discharge water as well as the parameters to be monitored and the receiving water quality requirements as approved by DWA. An environmental sensitivity map indicating environmental sensitive areas and features identified during the EIA process.

5.4.2 An emergency preparedness plan which must be reviewed on an annual basis when conducting an audit and after each emergency incident and or major accident. The plan must, amongst others address:

(a) Site Fire;

(b) Spillage (through the pipeline network on route and on the site of the sewage works);

(c) Natural disasters such as floods;

(d) Industrial action; and

(e) Contact details of police, ambulances and any emergency centre closer to the site.

5.5 The approved EMP and operational EMP for the sewage works must be implemented and strictly enforced during all phases of the project. It shall be seen as a dynamic document and shall be included in all contract documentation for all phases of the development when approved.

5.6 Changes to the EMP and the operational EMP for the sewage works which are environmentally defendable, shall be submitted to this Department for acceptance before such changes could be effected.

5.7 The Department reserves the right to request amendments to the EMP and the operational EMP for the sewage works should any impacts that were not anticipated or covered in the EIR be discovered.

5.8 The provisions of the approved EMP and the operation EMP for the sewage works including the mitigation measures identified in the EIR and specialist' studies shall be an extension of the conditions of this EA and therefore noncompliance with them would constitute noncompliance with the EA.

5.9 The sewage works must be managed and operated:

5.9.1 In accordance with an Environmental Management System (EMS), that *inter alia* identifies and minimises risks of pollution, including those arising from operations, maintenance, accidents, incidents and non-conformances and those drawn to the attention of the holder of the environmental authorisation as a result of complaints;

5.9.2 By sufficient persons who are competent in respect of the responsibilities to be undertaken by them in connection with the operation of the activities.

6. ENVIRONMENTAL CONTROL OFFICER

6.1 The holder of this authorisation must appoint an **independent** Environmental Control Officer (ECO) with experience or expertise in the field for the construction phase of the development. The ECO will have the responsibility to ensure that the conditions referred to in this authorisation are implemented and to ensure compliance with the provisions of the EMPr.

6.2 The ECO must be appointed before commencement of any authorised activity.

6.3 Once appointed, the name and contact details of the ECO must be submitted to the *Director: Compliance Monitoring* of the Department.

6.4 The ECO must remain employed until all rehabilitation measures, as required for implementation due to construction damage, are completed and the site is ready for operation.

6.4.1 The ECO must:

6.4.2 Keep record of all activities on site, problems identified, transgressions noted and a schedule of tasks undertaken by the ECO.

6.4.3 Keep and maintain a detailed incident (including spillage of bitumen, fuels, chemicals, or any other material) and complaint register on site indicating how these issues were addressed, what rehabilitation measures were taken and what preventative measures were implemented to avoid re-occurrence of incidents/complaints.

6.4.4 Keep and maintain a daily site diary.

6.4.5 Keep copies of all reports submitted to the Department.

6.4.6 Keep and maintain a schedule of current site activities including the monitoring of such activities.

6.4.7 Obtain and keep record of all documentation, permits, licences and authorisations such as waste disposal certificates, hazardous waste landfill site licences etc. required by this facility.

6.4.8 Compile a monthly monitoring report.

7. WASTE MANAGEMENT CONTROL OFFICER

7.1 The applicant must designate a Waste Management Control Officer (WMCO), who will monitor and ensure compliance and correct implementation of all conditions and provisions as stipulated in the environmental authorisation and approved EMP related to the sewage works.

7.2 The WMCO must report any non-compliance with any environmental authorisation conditions or requirements or provisions of NEMWA to the Department through the means reasonably available.

7.3 The duties and responsibility of the WMCO should not be seen as exempting the holder of the environmental authorisation from the legal obligations in terms of the NEMWA.

8. RECORDING AND REPORTING TO THE DEPARTMENT

8.1 The holder of this authorisation must keep all records relating to monitoring and auditing on site and make it available for inspection to any relevant department and the competent authority in respect of this development.

8.2 All records and/or reports required or resulting from activities relating to this environmental authorisation must:

8.2.1 be legible;

8.2.2 be submitted as required and must form part of the external audit report;

8.2.3 if amended, the record and/or report must be amended in such a way that the original and any subsequent amendments remain legible and are easily retrievable; and

8.2.4 be retained in accordance with documented procedures which are approved by the Department.

8.3 All documentation e.g. audit/monitoring/compliance reports and notifications, required to be submitted to the Department in terms of this authorisation, must be submitted to the *Director: Compliance Monitoring* at the Department.

8.4 The holder of the environmental authorisation must keep records and update all the information referred to in Annexure II and submit this information to the Department on an annual basis.

9. ENVIRONMENTAL AUDIT REPORT FOR CONSTRUCTION

9.1 The holder of the authorisation must submit an environmental audit report to the Department within 30 days of completion of the construction phase (i.e. within 30 days of site handover) and within 30 days of completion of rehabilitation activities.

9.2 The environmental audit report must:

9.2.1 Be compiled by an independent environmental auditor;

9.2.2 Indicate the date of the audit, the name of the auditor and the outcome of the audit;

9.2.3 Evaluate compliance with the requirements of the approved EMP and this environmental authorisation;

9.2.4 Include measures to be implemented to attend to any non-compliances or degradation noted;

9.2.5 Include copies of any approvals granted by other authorities relevant to the development for the reporting period;

9.2.6 Highlight any outstanding environmental issues that must be addressed, along with recommendations for ensuring these issues are appropriately addressed;

9.2.7 Include a copy of this authorisation and the approved EMP;

9.2.8 Include all documentation such as waste disposal certificates, hazardous waste landfill site licences etc. pertaining to this authorisation; and

9.2.9 Include evidence of adherence to the conditions of this authorisation and the EMP where relevant such as training records and attendance records.

10. COMMENCEMENT OF ACTIVITIES

10.1 The authorised activity shall not commence within twenty (20) days of the date of signature of the authorisation.

10.2 An appeal under section 43 of the National Environmental Management Act (NEMA), Act 107 of 1998 (as amended), does not suspend an environmental authorisation or exemption, or any provisions or conditions attached thereto, or any directive, unless the Minister, MEC or delegated organ of state directs otherwise.

10.3 Should you be notified by the Minister of a suspension of the authorisation pending appeal procedures, you may not commence with the activity until such time that the Minister allows you to commence with such an activity in writing.

10.4 The holder of this authorisation must obtain a Water Use Licence from the Department of Water Affairs (DWA) prior to the commencement of the project should the holder impact on any wetland or water resource.. A copy of the license must be submitted to the *Director: Environmental Impact Evaluation* at the Department.

10.5 The holder of this authorisation must obtain the appropriate permits from the Department of Agriculture, Forestry and Fisheries (DAFF) for the removal of plants listed in the National Forest Act and from the relevant provincial department for the destruction of species protected in terms of the specific provincial legislation. Copies of any such permits obtained must be included in the first audit submitted to the Department.

11. NOTIFICATION TO AUTHORITIES

11.1 Fourteen (14) days written notice must be given to the Department that the activity will commence. Commencement for the purposes of this condition includes site preparation. The notice must include a date on which it is anticipated that the activity will commence. This notification period may coincide with the Notice of Intent to Appeal period, within which construction may not commence.

12. OPERATION OF THE ACTIVITY

12.1 Fourteen (14) days written notice must be given to the Department that the activity operational phase will commence.

12.2 The holder of this authorisation must compile an operational EMPr for the operational phase of the activity or alternatively, if the holder has an existing operational environmental management system, it must be amended to include the operation of the authorised activity.

13. SITE CLOSURE AND DECOMMISSIONING

13.1 Should the activity ever cease or become redundant, the applicant shall undertake the required actions as prescribed by legislation at the time and comply with all relevant legal requirements administered by any relevant and competent authority at that time.

14. LEASING AND ALIENATION OF THE SITE

14.1 Should the holder of the environmental authorisation want to alienate or lease the site, he/she shall notify the Department in writing of such an intention at least 120 days prior to the said transaction. Should the approval be granted, the subsequent holder of the environmental authorisation shall remain liable to compliance with all licence conditions.

15. TRANSFER OF ENVIRONMENTAL AUTHORISATION

15.1 Should the holder of the environmental authorisation transfer holdership of this environmental authorisation due to a change of ownership [as provided for in terms of S24E(c) of NEMA], he/she must apply in terms of Section 52 of NEMWA.

15.2 Should the transfer of holder ship of this environmental authorisation mentioned above be for any reason other than the change of ownership in the property, the holder of this environmental authorisation must inform the Department of any change in ownership in the property and must request an amendment to this environmental authorisation to reflect such change in ownership.

15.3 Any subsequent holder of an environmental authorisation shall be bound by conditions of this environmental authorisation.

16. INVESTIGATIONS

16.1 If, in the opinion of the Department, pollution, nuisances or health risks may be or are occurring on the site, the holder of the environmental authorisation must initiate an investigation into the cause of the problem or suspected problem, including such investigations as identified by the Department related to the risks posed.

16.2 Should the investigation carried out as per conditions 16.1 above reveal any unacceptable levels of pollution, the holder of the environmental authorisation must submit mitigation measures to the satisfaction of the relevant Department.

17. SPECIFIC CONDITIONS RELATED TO THE SEWAGE WORKS AND EVAPORATION PONDS

17.1 Site Security and Access Control

17.1.1 The holder of the environmental authorisation must ensure effective access control to the centralised sewage treatment plant to prevent unauthorised entry. Weather-proof, durable and legible signs in at least three official languages applicable in the area must be displayed at each entrance to the site. The signs must indicate the risks involved in entering the site, must include the person responsible for the operation of the site.

17.2 Permissible waste

17.2.1 The classification, handling and treatment of the sewage effluent must conform to the latest edition of the document "Minimum Requirements for Handling, Classification and Disposal of Hazardous Waste, Waste Management Series, Department of Water Affairs and Forestry" or its successor.

17.3 Construction and commissioning of activities

17.3.1 The site construction (existing and new) must be approved by a registered professional engineer and compliant with recognised civil engineering standards and adequately lined to protect surface and ground water resources.

17.3.2 Prior to commencement of construction activities, a final site lay-out plan must be submitted to the Department for approval. The document must be submitted to the Director: Waste Licencing at the Department. This site lay-out plan must indicate the micro-siting of the project dictated by findings of additional drilling and reassessment of the dolomitic stability of the site.

17.3.3 The sewage treatment facility and evaporation ponds must have firm and impermeable base to prevent contamination of ground water.

17.3.4 The liners of the evaporation ponds must consist of 150mm base preparation layer in situ soil, 1.5mm HDPE liner, 1mm cuspated HDPE liner, 15mm HDPE liner, 1mm cuspated HDPE liner and 2mm HDPE liner.

17.3.5 The evaporation ponds must be designed in such a way that maintenance can take place without disrupting the normal processes of the CSP plant.

17.3.6 The site plan must only be changed under the supervision of a registered professional engineer.

17.3.7 The holder of authorisation must construct and maintain on a continuous basis, drainage and containment system capable of collecting and storing all contaminated runoff water rising from the sewage works site in the event of 1:100 year rain event. The system must under said rainfall event, maintain a freeboard of one metre.

17.4 Environmental auditing and reporting

17.4.1 Internal Audits

(a) Internal audits must be conducted annually by the holder of the environmental authorisation in order to audit compliance with conditions related to the sewage works of this environmental authorisation and the approved EMP, and on each audit occasion an official report must be compiled by the relevant auditor to report the findings of the audits, which must be made available to the external auditor specified in condition below.

17.4.2 External Audits

(a) The holder of the environmental authorisation and approved EMP must appoint an independent external auditor to audit the sewage works biannually subject to the environmental authorisation and this auditor must compile an audit report documenting the findings of the audit, which must be submitted by the holder of the environmental authorisation.

(b) The audit report must -

(i) Indicate compliance to requirements related to the sewage works as included in the approved operational EMP for the sewage works;

(ii) Specifically state whether conditions related to the sewage works of this environmental authorisation are adhered to;

(iii) Include an interpretation of all available data and test results regarding the operation of the site and all its impacts on the environment;

(iv) Specify target dates for the implementation of the recommendations by the holder of the environmental authorisation to achieve compliance;

(v) Contain recommendations regarding non-compliance or potential non-compliance and must specify target dates for the implementation of the recommendations by the holder of the environmental authorisation and whether corrective action taken for the previous audit non conformities was adequate;

(vi) Show results graphically and conduct trend analysis; and

(vii) Include the information required in Annexure II.

(c) The holder of the environmental authorisation must carry out all tests required in terms of this environmental authorisation in accordance with published laboratory analysis methods or those prescribed by and obtainable from the South African Bureau of Standards (SABS), referred to in the Standards Act, 2008 (Act 08 of 2008).

(d) Each external audit report referred to in condition 10.2 must be submitted to the Department within 30 days from the date on which the external auditor finalised the audit.

17.4.3 Reporting

(a) The holder of the environmental authorisation must, within 14 days inform the Department from the occurrence or detection of any incident referred to in condition 17.1, must within 14 days period of time specified by the Department submit an action plan, which must –

(i) Correct the impact resulting from the incident;

(ii) Prevent the incident from causing any further impact; and

(iii) Prevent a recurrence of a similar incident to the satisfaction of the Department.

(b) In the event that measures have not been implemented within 21 days of the incident, or within the time period identified by the Department, or the measures which have been implemented are inadequate, the Department may implement the necessary measures at the cost and risk of the holder of the environmental authorisation.

(c) The holder of the environmental authorisation must keep an incident report and complaints register, which must be made available to the external auditor, representatives of this Department and Department of Water Affairs for the purpose of audit.

(d) The Department must be notified as soon as the holder of this environmental authorisation becomes aware of the following incidents:

(i) Any malfunction, breakdown or failure of equipment or techniques, accident or fugitive emission which has caused , is causing or may cause significant pollution;

(ii) The breach of this environmental authorisation; and

(iii) Any significant adverse environmental and health effects.

17.5 General operation and impact management of waste management activities

17.5.1 Waste, which is not sewage from the authorised development, must be dealt with according to relevant legislation or the Department's policies and practices.

17.5.2 The holder of environmental authorisation must prevent spillages. Where the spillages occur, the holder of authorisation must ensure the effective and safe cleaning of such spillages.

17.5.3 The treatment of effluent must not impact on a water resource or on any other person's water use, property or land and must not be detrimental to the health of the public in the vicinity of the activity.

17.5.4 The holder of environmental authorisation must prevent the occurrence of nuisance conditions or health hazards.

17.5.5 The pipelines used for the conveyance of effluent must be painted in a conspicuous colour or manufactured of a coloured material distinctly different from the colour of the pipes in which drinking water is flowing to avoid the possibility of any cross-connection of the different pipelines.

17.5.6 The holder of environmental authorisation must ensure that all personnel who work with hazardous waste are trained to deal with these potential hazardous situations so as to minimise the risks involved. Records of training and verification of competence must be kept by the Authorisation Holder.

17.5.7 The holder of environmental authorisation must ensure that the treated sludge adheres to "the Guidelines for the Utilisation and Disposal of Wastewater Sludge", Water Research Commission Reports, Volumes 1-5 published by the Department of Water Affairs and Forestry, dated March 2008.

17.5.8 The holder of authorisation must ensure that the effluent treatment operates within its design parameters at all times.

17.5.9 The holder of environmental authorisation must ensure that non biodegradable solids and the sludge are disposed of at a Waste Management Facility licensed to accept such wastes.

17.5.10 The holder of environmental authorisation must take all reasonable steps to ensure that the integrity of the waterproof base and infrastructure used for the treatment of sewage are routinely monitored and corrective action must be taken before containment integrity is breached.

17.5.11 The holder of environmental authorisation must ensure that the treated effluent that is used for irrigation complies with the General Standards, as published by the Department of Water Affairs in Government Notice 991 of 18 May 1984 or its successor.

17.5.12 No effluent must be discharged into any storm water drain or furrow, whether by commission or by omission.

17.6 Water quality monitoring

17.6.1 Surface water monitoring shall be performed in all storm water drains on and adjacent to the Site at locations selected in conjunctions with the Department of Water Affairs and at such a frequency as determined by the responsible authority.

18. SPECIFIC CONDITIONS RELATED TO THE CSP DEVELOPMENT

18.1 Prior to the onset of the construction phase, a detailed walkthrough and thorough quadrant search of the footprint must be undertaken to search for *Lihtops aucampiae subsp. aucampiae var. aucampiae* species in order to rescue affected species. Individual can be translocated to the outside of the footprint or removed to a suitable botanical garden for cultivation and protection. This should only be done after consultation with provincial conservation authorities.

18.2 Prior to commencement of construction activities, a final site lay-out plan must be submitted to the Department for approval. This site lay-out plan must indicate the micro-siting of the project.

18.3 A lighting engineer must be consulted to assist in the planning and placement of light fixtures in order to reduce the impacts associated with glare and light trespass.

18.4 The Hydro geological monitoring data must be evaluated bi-annually by a qualified Hydro Geologist and the report from the Hydro Geologist must be included in the annual sewage works audit.

18.5 No development is allowed in close proximity to drainage channels and outcrops or ridges. A buffer zone of 35m must be maintained around all of these features.

18.6 Only indigenous trees from the area may be used in the landscaping of the development.

Date of environmental authorisation: 6 August 2012

Mr Mark Gordon
Chief Director: Integrated Environmental Authorisations
Department of Environmental Affairs

Annexure I: Reasons for Decision

1. Key factors considered in making the decision

All In reaching its decision, the Department took, *inter alia,* the following into consideration -

a) The information contained in the EIR dated January 2012 and Addendum Report dated March 2012;
b) The mitigation measures included in the EIR dated January 2012 and the EMP;
c) The information contained in the specialist studies contained within EIR dated January 2012;
d) The comments received from the Directorate: Authorisations & Waste Disposal Management and comments from interested and affected parties as included in the EAIR dated January 2012; and
e) The objectives and requirements of relevant legislation, policies and guidelines, including section 2 of the National Environmental Management Act, 1998 (Act No. 107 of 1998).

2. Conclusions

After consideration of the information and factors listed above the Department reached the following conclusions:

a) The identification and assessment of impacts are detailed in the EIR dated January 2012 and sufficient assessment of the key identified issues and impacts have been completed.
b) The procedure followed for impact assessment is adequate for the decision-making process.
c) The proposed mitigation of impacts identified and assessed adequately curtails the identified impacts.
d) A sufficient public participation process was undertaken and the applicant has satisfied the minimum requirements as prescribed in the EIA regulations, 2006, for public involvement.

In view of the above, the Department is satisfied that, subject to compliance with the conditions contained in the environmental authorisation, the activities will not conflict with the general objectives of integrated environmental management laid down in Chapter 5 of the National Environmental Management Act, 1998 and that any potentially detrimental environmental impacts resulting from the activity can be mitigated to acceptable levels. The application is accordingly granted.

ANNEXURE II

INFORMATION WHICH SHALL BE SUBMITTED ON AN ANNUAL BASIS CONDITION 8.4

** = Indicate with an X. Please print legibly.*

NAME OF SITE: _____ DATE OF REPORT: _____(y/m/d)

1. **Registered owner(s) of property on which the effluent treatment facility is situated:**

Name	Telephone	
Postal Address	Fax	
	Postal Code	

2. **Operator in control of the effluent treatment facility:**

Name	Telephone	
Identity number	Tel. After hours	
Educational Qualifications		
Other Relevant competencies:		

3. **Indicate the type of waste and approximate quantities of effluent treated during the year:**

TOTAL	

4. **Indicate the type of waste and approximate quantities of sludge reused, recycled, or disposed of during the year:**

TOTAL		

I, the undersigned, declare that the information stated above is to my knowledge a true reflection of the status at the _____ effluent treatment facility.

Signature: _____

Name: _____

Capacity: _____

Place: _____ Date_____

environmental affairs

Department:
Environmental Affairs
REPUBLIC OF SOUTH AFRICA

Private Bag X 447· PRETORIA · 0001· Fedsure Building · 315 Pretorius Street · PRETORIA
Tel (+ 27 12) 310 3911 · Fax (+ 2712) 322 2682

NEAS Reference: DEA/EIA/AMEND/0000101/2013
DEA Reference: 12/12/20/2316
Enquiries: Masina Litsoane
Telephone: 012-395-1778 **Fax:** 012-320-7539 **E-mail:** MLitsoane@environment.gov.za

Mr. Terence Govender
SolarReserve SA (Pty) Ltd
Office L6 B-1, 6th Floor SinoSteel Plaza
159 Rivonia Road
SANDTON
2191

Fax no: (011) 784 7549

Dear Mr Govender

AMENDMENT OF ENVIRONMENTAL AUTHORISATION: PROPOSED REDSTONE SOLAR THERMAL POWER PLANT ON THE FARM 469 HAY RD, NORTHERN CAPE PROVINCE

The Department's decision on the above application issued on 06 August 2012 and your correspondence dated 22 May 2013 and 07 June 2013 refer.

Based on a review of the reason for requesting an amendment to the above authorisation, the Department, in terms of regulation 42 of the Environmental Impact Assessment Regulations, 2010, has decided to amend the environmental authorisation (EA) dated 06 August 2012 as follows:

The project name on the cover letter and page 1 of environmental authorisation, is amended:
From:

"Humansrus Solar Thermal Power Plant (Humansrus CSP)"

To:

"Redstone Solar Thermal Power Plant"

This letter must be read in conjunction with the EA dated 06 August 2012

In terms of regulation 10(2) of the Environmental Impact Assessment Regulations, 2010 (the Regulations), you are instructed to notify all registered interested and affected parties, in writing and within 12 (twelve) days of the date of the Department's decision in respect of the amendment made as well as the provisions regarding the submission of appeals that are contained in the Regulations.

Your attention is drawn to Chapter 7 of the Regulations, which prescribes the appeal procedure to be followed. This procedure is summarised in the attached document. Kindly include a copy of this document with the letter of notification to interested and affected parties.

Should the applicant or any other party wish to appeal any aspect of the amendment decision a notice of intention to appeal must be lodged by all prospective appellants with the Minister, within 20 days of the date of the EA, by means of one of the following methods:

By facsimile: 0123207561;
By post: Private Bag X447,
Pretoria, 0001; or
By hand: 2nd Floor, Fedsure Building, North Tower,
Cnr. LilianNgoyi (Van der Walt) and Pretorius Streets,
Pretoria.

If the applicant wishes to lodge an appeal, it must also serve a copy of the notice of intention to appeal on all registered interested and affected parties as well as a notice indicating where, and for what period, the appeal submission will be available for inspection, should you intend to submit an appeal.

Please include the Department *(Attention: Director: Integrated Environmental Authorisations)* in the list of interested and affected parties, notified through your notification letter to interested and affected parties, for record purposes.

Appeals must be submitted in writing to:

Mr Z Hassam Director: Appeals and Legal Review, of this Department at the above mentioned addresses or fax number. Mr Hassam can also be contacted at:

Tel: 012-310-3271
Email: AppealsDirectorate@environment.gov.za

The authorised activities shall not commence within twenty (20) days of the date of signature of the authorisation. Further, please note that the Minister may, on receipt of appeals against the authorisation or conditions thereof suspend the authorisation pending the outcome of the appeals procedure.

Yours sincerely

MrMark Gordon
Chief Director: Integrated Environmental Authorisations
Department of Environmental Affairs
Date: 26/06/2018

CC:	JC Pretorius	WorleyParsons RSA	Tel: 012-745-2000	Fax: 012-745-2001
	Mr S. Henge	Tsantsabane Local Municipality	Tel: 053 384 8600	Fax: 053-313-1602
	Mr S Malaza	Compliance Monitoring (DEA)	Tel: 012-310-3397	Fax: 012-320-5744

APPEALS PROCEDURE IN TERMS OF CHAPTER 7 OF THE NEMA EIA REGULATIONS, 2010 (THE REGULATIONS) AS PER GN R.543 OF 2010 TO BE FOLLOWED BY THE APPLICANT AND INTERESTED AND AFFECTED PARTIES UPON RECEIPT OF NOTIFICATION OF AN ENVIRONMENTAL AUTHORISATION (EA)

APPLICANT	INTERESTED AND AFFECTED PARTIES (IAPs)
1. Receive EA from the relevant Competent Authority (the Department of Environmental Affairs [DEA]).	1. Receive EA from Applicant/Consultant.
2. Within 12 days of date of the EA notify all IAPs of the EA and draw their attention to their right to appeal against the EA in terms of Chapter 7 of the Regulations.	2. N/A.
3. If you want to appeal against the EA, submit a notice of intention to appeal within 20 days of the date of the EA with the Minister of Water and Environmental Affairs (the Minister).	3. If you want to appeal against the EA, submit a notice of intention to appeal within 20 days of the date of the EA. with the Minister of Water and Environmental Affairs (the Minister).
4. After having submitted your notice of intention to appeal to the Minister, provide each registered IAP with a copy of the notice of intention to appeal within 10 days of lodging the notice.	4. After having submitted your notice of intention to appeal to the Minister, provide the applicant with a copy of the notice of intention to appeal within 10 days of lodging the notice.
5. The Applicant must also serve on each IAP: • a notice indicating where and for what period the appeal submission will be available for inspection.	5. Appellant must also serve on the Applicant within 10 days of lodging the notice, • a notice indicating where and for what period the appeal submission will be available for inspection by the applicant.
6. The appeal must be submitted in writing to the Minister within 30 days after the lapsing of the period of 20 days provided for the lodging of the notice of intention to appeal.	6. The appeal must be submitted to the Minister within 30 days after the lapsing of the period of 20 days provided for the lodging of the notice of intention to appeal.
7. Any IAP who received a notice of intention to appeal may submit a responding statement to that appeal to the Minister within 30 days from the date that the appeal submission was lodged with the Minister.	7. An Applicant who received notice of intention to may submit a responding statement to the appeal to the Minister within 30 days from the date that the appeal submission was lodged with the Minister.

NOTES:

1. **An appeal against a decision must be lodged with;-**
   a) the Minister of Water and Environmental Affairs if the decision was issued by the Director- General of the Department of Environmental Affairs (or another official) acting in his/ her capacity as the delegated Competent Authority;
   b) the Minister of Justice and Constitutional Development if the applicant is the Department of Water Affairs and the decision was issued by the Director- General of the Department of Environmental Affairs (or another official) acting in his/ her capacity as the delegated Competent Authority;

2. **An appeal lodged with:-**
   a) the Minister of Water and Environmental Affairs must be submitted to the Department of Environmental Affairs;
   b) the Minister of Justice and Constitutional Development must be submitted to the Department of Environmental Affairs;

3. **An appeal must be:-**
   a) submitted in writing;
   b) accompanied by:
   - a statement setting out the grounds of appeal;
   - supporting documentation which is referred to in the appeal; and
   - a statement that the appellant has complied with regulation 62 (2) or (3) together with copies of the notices referred to in regulation 62.

environmental affairs

Department:
Environmental Affairs
REPUBLIC OF SOUTH AFRICA

Private Bag X 447 · PRETORIA · 0001 · Fedsure Building · 315 Pretorius Street · PRETORIA
Tel (+ 27 12) 310 3911 · Fax (+ 2712) 322 2682

NEAS Reference: DEA/EIA/0000765/2011
DEA Reference: 12/12/20/2316
Enquiries: Jay-Jay Mpelane
Telephone: (012) 310 3004 **Fax:** (012) 320 7539 **E-mail:** JMpelane@environment.gov.za

Mr Terence Govender
SolarReserve SA (Pty) Ltd
Sinosteel Plaza, Office L- 11C
159 Rivonia Road
SANDTON
2191

Telephone number: (011) 582 6880
Fax number: (011) 784 7549

Dear Mr Govender

APPLICATION FOR AMENDMENT OF THE ENVIRONMENTAL AUTHORISATION ISSUED ON 06 AUGUST 2012 AND THE AMENDMENT THEREOF DATED 26 JUNE 2013 FOR THE CONSTRUCTION OF THE REDSTONE CONCENTRATED SOLAR POWER FACILITY ON THE REMAINING PORTION OF THE FARM NO. 469, HAY RD IN THE TSANTSBANE LOCAL MUNICIPALITY, NORTHERN CAPE PROVINCE

The Environmental Authorisation (EA) issued for the abovementioned application by this Department on 06 August 2012, the amendment thereof dated 26 June 2013 and your application for amendment received by this Department on 22 January 2013 submitted in terms of the provisions of sub-regulation 39(1) of the EIA Regulations 2010, refer.

Based on a review of the reasons for requesting an amendment to the above Environmental Authorisation, this Department, in terms of regulation 42 of the Environmental Impact Assessment Regulations, 2010, has decided to amend the EA dated 06 August 2012 as follows:

The current farm name of the EA dated 06 August 2012 and the amendment thereof dated 26 June 2013 is amended:

From:

"Farm No. 469, Hay Rd"

To:

"Remaining Portion of the Farm No. 469, Hay Rd in the Northern Cape".

Furthermore, a shapefile of the approved development layout/footprint must be submitted to this Department within two (02) months of the date of this letter. The shapefile must be created using the Hartebeesthoek 94 Datum and the data should be in Decimal Degree Format using the WGS 84 Spheroid. The shapefile must include at a minimum the following extensions i.e. .shp; .shx; .dbf; .prj; and, .xml (Metadata file). If specific symbology was assigned to the file, then the .avl and/or the .lyr file must also be included. Data must be mapped at a scale of 1:10 000 (please specify if an alternative scale was used). The metadata must include a description of the base data used for digitizing. The shapefile must be submitted in a zip file using the EIA application reference number as the title.

The shape file must be submitted to:

Postal Address:
Department of Environmental Affairs
Private Bag X447
Pretoria
0001

Physical address:
Department of Environmental Affairs
Fedsure Forum Building (corner of Pretorius and Lillian Ngoyi Streets)
4th Floor South Tower
315 Pretorius Street
Pretoria
0002

For Attention: Mr Muhammad Essop
Integrated Environmental Authorisations
Strategic Infrastructure Developments
Telephone Number: (012) 395 1734
Fax Number: (012) 320 7539
Email Address: MEssop@environment.gov.za

This amendment letter must be read in conjunction with the EA dated 06 August 2012 and the amendment thereof dated 26 June 2013.

Yours faithfully

Mr Ishaam Abader
Deputy Director-General: Legal, Authorisations, Compliance and Enforcement
Department of Environmental Affairs
Date: 26/02/2014

	Mr S Malaza	Compliance Monitoring (DEA)	Tel: (012) 310 3397	Fax: (012) 320 5744

environmental affairs

Department:
Environmental Affairs
REPUBLIC OF SOUTH AFRICA

Private Bag X 447· PRETORIA · 0001· Environment House · 473 Steve Biko, Arcadia· PRETORIA
Tel (+ 27 12) 399 9372

DEA Reference: 12/12/20/2316/AM3
Enquiries: Muhammad Essop
Telephone: (012) 399 9406 **E-mail:** MEssop@environment.gov.za

Mr Terence Govender
SolarReserve SA (Pty) Ltd
Sinosteel Plaza, Office L- 11C
159 Rivonia Road
SANDTON
2191

Telephone number: (011) 582 6880
Email Address: Terence.govender@solarreserve.com

PER EMAIL / MAIL

Dear Mr Govender

AMENDMENT OF THE ENVIRONMENTAL AUTHORISATION ISSUED ON 06 AUGUST 2012 FOR THE CONSTRUCTION OF THE HUMANSRUS CONCENTRATED SOLAR POWER FACILITY ON THE REMAINING PORTION OF THE FARM NO. 469, HAY RD IN THE TSANTSABANE LOCAL MUNICIPALITY, NORTHERN CAPE PROVINCE

The Environmental Authorisation (EA) issued for the above application by this Department on 06 August 2012 as amended and your application for amendment to the EA received by this Department on 21 January 2015 refer.

Based on a review of the reason for requesting an amendment to the above EA, this Department, in terms of Chapter 5 of the Environmental Impact Assessment Regulations, 2014, has decided to amend the EA dated, 06 August 2012 as amended as follows:

Amendment 1: Amendment to extend the validity period of the EA:

The activity must commence within a period of two (02) years from the date of expiry of the EA issued on 06 August 2012 (i.e. the EA lapses on 06 August 2017). If commencement of the activity does not occur within that period, the authorisation lapses and a new application for environmental authorisation must be made in order for the activity to be undertaken.

This correspondence is only for the extension of the validity period as stated above. All conditions set out in the original EA dated 06 August 2012 as amended remain unchanged and must be adhered to.

This proposed amendment letter must be read in conjunction with the EA dated 06 August 2012 as amended.

In terms of Regulation 4(2) of the Environmental Impact Assessment Regulations, 2014 (the Regulations), you are instructed to notify all registered interested and affected parties, in writing and within 14 (fourteen) days of the date of the Department's decision in respect of the amendment made as well as the provisions regarding the submission of appeals that are contained in the Regulations.

Your attention is drawn to Chapter 2 of Government Notice No. R.993, which prescribes the appeal procedure to be followed. Kindly include a copy of this document with the letter of notification to interested and affected parties.

An appellant must submit an appeal to the appeal administrator, and a copy of the appeal to the applicant, any registered interested and affected party and any organ of state with interest in the matter within 20 days from the date that the notification of the decision was sent to the applicant by the competent authority.

By post: Private Bag X447,
Pretoria, 0001; or
By hand: Environment House
473 Steve Biko,
Arcadia,
Pretoria, 0083

Appeals must be submitted in writing to:

Mr Z Hassam, Director: Appeals and Legal Review, of this Department at the above mentioned addresses. Mr Hassam can also be contacted at:

Tel: (012) 399 9356
Email: Appealsdirectorate@environment.gov.za

Please note that in terms of section 43(7) of the National Environmental Management Act, 1998, an appeal under section 43 of that Act will suspend the environmental authorisation or any provision or condition attached thereto. In the instance where an appeal is lodged, you may not commence with the activity until such time that the appeal is finalised.

For guidance on appeals submitted to the Minister in terms of NEMA and the SEMAs, please find a copy of the guideline on the administration of appeals on the Department's website:
(https://www.environment.gov.za/documents/forms#legal_authorisations).

Yours faithfully

Mr Sabelo Malaza
Chief Director: Integrated Environmental Authorisations
Department of Environmental Affairs
Date: 6/3/2025

environmental affairs

Department:
Environmental Affairs
REPUBLIC OF SOUTH AFRICA

Private Bag X 447· PRETORIA · 0001· Environment House · 473 Steve Biko, Arcadia· PRETORIA
Tel (+ 27 12) 399 9372

DEA Reference: 12/12/20/2316/AM4
Enquiries: Mr Muhammad Essop
Telephone: (012) 399 9406 **E-mail:** MEssop@environment.gov.za

Mr Terence Govender
ACWA Power SolarReserve Redstone Solar Thermal Power Plant
Sinosteel Plaza, Office L- 11C
159 Rivonia Road
SANDTON
2191

Telephone number: (011) 582 6880
Email Address: Terence.govender@solarreserve.com

PER EMAIL / MAIL

Dear Mr Govender

AMENDMENT OF THE ENVIRONMENTAL AUTHORISATION ISSUED ON 06 AUGUST 2012 FOR THE CONSTRUCTION OF THE HUMANSRUS CONCENTRATED SOLAR POWER FACILITY ON THE REMAINING PORTION OF THE FARM NO. 469, HAY RD IN THE TSANTSBANE LOCAL MUNICIPALITY, NORTHERN CAPE PROVINCE – PARTIAL APPROVAL

The Environmental Authorisation (EA) issued for the above application by this Department on 06 August 2012 and your application for amendment to the EA received by this Department on 11 February 2015 refer.

Based on a review of the reason for requesting an amendment to the above EA, this Department, in terms of Chapter 5 of the Environmental Impact Assessment Regulations, 2014, has decided to amend the EA dated, 06 August 2012 as amended as follows:

Amendment 1: Amendment to the contact details of the holder of the EA:

"Redstone Solar Thermal Power Plant"

Represented by: Mr Terence Govender
Sinosteel Plaza, Office L- 11C
159 Rivonia Road
SANDTON
2191

Telephone Number: (083) 449 0433
Fax Number: (011) 784 7549
Email Address: Terence.govender@solarreserve.com

Is hereby amended to:

"ACWA Power SolarReserve Redstone Solar Thermal Power Plant"

Represented by: Mr Terence Govender
Sinosteel Plaza, Office L- 11C
159 Rivonia Road
SANDTON
2191

Telephone Number: (011) 582 6880
Fax Number: (086) 645 4229
Cell phone Number: (083) 499 0433
Email Address: Terence.govender@solarreserve.com

Amendment 2: Addition of Listed Activity into the EA:

Based on a review of the reason for requesting an amendment to the above EA, this Department, in terms of Regulation 30(2) of the Environmental Impact Assessment Regulations, 2014, has decided **not to grant** the second request to amend the EA dated 06 August 2012 as amended. The reasons for the decision are provided below:

Following a review of the application for amendment to the EA dated 10 February 2015 and the supporting motivation provided, this Department is of the view that the amendment process cannot be followed to include the specific activity that were not assessed and applied for in the Environmental Impact Assessment process.

This Department did receive an amended application form and both the amended application form and the Final Environmental Impact Assessment Report (prepared by WorleyParsons Recourses & Energy and dated January 2012) did not include Activity 18 of GNR 544. As such, this Department is of the opinion that the activity in question was not applied for. In addition, this Department does not support the motivation in the application for amendment for the abovementioned request for amendment to include Activity 18 of GNR 544 as a precautionary measure. In view of the above, this Department will not grant your request for amendment 2.

Based on the above, this Department advises that the applicant submits a new application for Environmental Authorisation. Please note that the Department of Environmental Affairs will not be the competent authority and the application must be lodged with the respective provincial Department. However, a request for delegation for the Department of Environmental Affairs to process the application can be requested from the respective provincial Department. It must be further noted that no infilling or excavation is allowed in the riparian habitat without Environmental Authorisation if required.

This proposed amendment letter must be read in conjunction with the EA dated 06 August 2012 as amended.

In terms of Regulation 4(2) of the Environmental Impact Assessment Regulations, 2014 (the Regulations), you are instructed to notify all registered interested and affected parties, in writing and within 14 (fourteen) days of the date of the Department's decision in respect of the amendment made as well as the provisions regarding the submission of appeals that are contained in the Regulations.

Your attention is drawn to Chapter 2 of Government Notice No. R. 993, which prescribes the appeal procedure to be followed. Kindly include a copy of this document with the letter of notification to interested and affected parties.

An appellant must submit an appeal to the appeal administrator, and a copy of the appeal to the applicant, any registered interested and affected party and any organ of state with interest in the matter within 20 days from the date that the notification of the decision was sent to the applicant by the competent authority.

By post: Private Bag X447,
Pretoria,
0001; or

By hand: Environment House
473 Steve Biko,
Arcadia,
Pretoria,
0083

Appeals must be submitted in writing to:

Mr Z Hassam, Director: Appeals and Legal Review, of this Department at the above mentioned addresses. Mr Hassam can also be contacted at:

Tel: (012) 399 9356
Email: Appealsdirectorate@environment.gov.za

Please note that in terms of section 43(7) of the National Environmental Management Act, 1998, an appeal under section 43 of that Act will suspend the environmental authorisation or any provision or condition attached thereto. In the instance where an appeal is lodged, you may not commence with the activity until such time that the appeal is finalised.

For guidance on appeals submitted to the Minister in terms of NEMA and the SEMAs, please find a copy of the guideline on the administration of appeals on the Department's website: (https://www.environment.gov.za/documents/forms#legal_authorisations).

Yours faithfully

Mr Sabelo Malaza
Chief Director: Integrated Environmental Authorisations
Department of Environmental Affairs
Date: 27/03/2015

environmental affairs

Department:
Environmental Affairs
REPUBLIC OF SOUTH AFRICA

Private Bag X 447· PRETORIA · 0001· Environment House · 473 Steve Biko, Arcadia· PRETORIA
Tel (+ 27 12) 399 9372

DEA Reference: 12/12/20/2316/AM5
Enquiries: Dikeledi Mokotong
Telephone: (012) 399 8801 **E-mail:** dmokotong@environment.gov.za

Mr Alistair David Jessop
ACWA Power SolarReserve Redstone Solar Thermal Power Plant
Office XX07001
90 Grayston Drive
SANDTON
2196

Telephone Number: (011) 582 6880
Email Address: Terence.govender@solarreserve.com

AMENDMENT OF THE ENVIRONMENTAL AUTHORISATION ISSUED ON 06 AUGUST 2012 FOR THE ESTABLISHMENT OF THE ACWA POWER SOLARRESERVE REDSTONE SOLAR THERMAL POWER PLANT ON THE FARM 469 HAY RD, TSANTSABANE LOCAL MUNICIPALITY, SIYANDA DISTRICT MUNICIPALITY, NORTHERN CAPE PROVINCE

The Environmental Authorisation (EA) issued for the above application by this Department on 06 August 2012, your application for amendment of the EA received on 27 May 2015, the acknowledgement letter dated 28 May 2015 and the additional information received on 23 July 2015 refer.

Based on a review of the reason for requesting an amendment to the above EA, this Department, in terms of Chapter 5 of the Environmental Impact Assessment Regulations, 2014, has decided to amend the EA dated 06 August 2012 as follows:

Amendment 1: Amendment of the CSP tower specifications in the EA

From:

"An approximately 200 meter tall slip-form concrete tower and thermal receiver rated at approximately 565 MW thermal (MWt);"

To:

"An approximately 250 m high concrete tower with a central receiver mounted atop"

This proposed amendment letter must be read in conjunction with the EA dated 06 August 2012 as amended.

In terms of Regulation 4(2) of the Environmental Impact Assessment Regulations, 2014 (the Regulations), you are instructed to notify all registered interested and affected parties, in writing and within 14 (fourteen) days of the date of the Department's decision in respect of the amendment made as well as the provisions regarding the submission of appeals that are contained in the Regulations.

M.S

Your attention is drawn to Chapter 2 of Government Notice No. R. 993, which prescribes the appeal procedure to be followed. Kindly include a copy of this document with the letter of notification to interested and affected parties.

An appellant must submit an appeal to the appeal administrator, and a copy of the appeal to the applicant, any registered interested and affected party and any organ of state with interest in the matter within 20 days from the date that the notification of the decision was sent to the applicant by the competent authority.

By post: Private Bag X447,
Pretoria,
0001; or

By hand: Environment House
473 Steve Biko,
Arcadia, Pretoria,

Appeals must be submitted in writing to:

Mr Z Hassam, Director: Appeals and Legal Review, of this Department at the above mentioned addresses. Mr Hassam can also be contacted at:

Tel: (012) 399 9356
Email: Appealsdirectorate@environment.gov.za

Please note that in terms of section 43(7) of the National Environmental Management Act, 1998, an appeal under section 43 of that Act will suspend the environmental authorisation or any provision or condition attached thereto. In the instance where an appeal is lodged, you may not commence with the activity until such time that the appeal is finalised.

For guidance on appeals submitted to the Minister in terms of NEMA and the SEMAs, please find a copy of the guideline on the administration of appeals on the Department's website:
(https://www.environment.gov.za/documents/forms#legal_authorisations).

Yours faithfully

Mr Sabelo Malaza
Chief Director: Integrated Environmental Authorisations
Department of Environmental Affairs
Date: 9/11/2015

M.S

environmental affairs

Department:
Environmental Affairs
REPUBLIC OF SOUTH AFRICA

Private Bag X 447· PRETORIA · 0001· Environment House · 473 Steve Biko, Arcadia· PRETORIA
Tel (+ 27 12) 399 9372

DEA Reference: 12/12/20/2316/AM6
Enquiries: Mr Muhammad Essop
Telephone: (012) 399 9406 **E-mail:** MEssop@environment.gov.za

Mr Alistair David Jessop
ACWA Power SolarReserve Redstone Solar Thermal Power Plant
Office XX07001
90 Grayston Drive
SANDTON
2196

Telephone Number: (011) 582 6880
Email Address: Terence.govender@solarreserve.com

PER EMAIL / MAIL

Dear Mr Jessop

AMENDMENT OF THE ENVIRONMENTAL AUTHORISATION ISSUED ON 06 AUGUST 2012 FOR THE CONSTRUCTION OF THE HUMANSRUS CONCENTRATED SOLAR POWER FACILITY ON THE REMAINING PORTION OF FARM NO. 469 HAY RD IN THE TSANTSBANE LOCAL MUNICIPALITY, NORTHERN CAPE PROVINCE

The Environmental Authorisation (EA) issued for the above application by this Department on 06 August 2012, your application for amendment to the EA received by this Department on 21 July 2015, the acknowledgement letter dated 27 July 2015 and the additional information received on 06 August 2015 refer.

Based on a review of the reason for requesting an amendment to the above EA, this Department, in terms of Chapter 5 of the Environmental Impact Assessment Regulations, 2014, has decided to amend the EA dated 06 August 2012 as follows:

Amendment 1: Amendment to the contact details of the holder of the EA

From:

"ACWA Power SolarReserve Redstone Solar Thermal Power Plant"

Represented by: Mr Terence Govender
Sinosteel Plaza, Office L- 11C
159 Rivonia Road
SANDTON
2191

Telephone Number: (011) 582 6880
Fax Number: (086) 645 4229
Cell phone Number: (083) 499 0433
Email Address: Terence.govender@solarreserve.com

M.

To:

"ACWA Power SolarReserve Redstone Solar Thermal Power Plant"

Represented by: Mr Alistair David Jessop
Office XX07001
90 Grayston Drive
SANDTON
2196

Telephone Number: (011) 582 6880
Fax Number: (086) 645 4229
Cell phone Number: (083) 499 0433
Email Address: Terence.govender@solarreserve.com

This proposed amendment letter must be read in conjunction with the EA dated 06 August 2012 as amended.

In terms of Regulation 4(2) of the Environmental Impact Assessment Regulations, 2014 (the Regulations), you are instructed to notify all registered interested and affected parties, in writing and within 14 (fourteen) days of the date of the Department's decision in respect of the amendment made as well as the provisions regarding the submission of appeals that are contained in the Regulations.

Your attention is drawn to Chapter 2 of Government Notice No. R. 993, which prescribes the appeal procedure to be followed. Kindly include a copy of this document with the letter of notification to interested and affected parties.

An appellant must submit an appeal to the appeal administrator, and a copy of the appeal to the applicant, any registered interested and affected party and any organ of state with interest in the matter within 20 days from the date that the notification of the decision was sent to the applicant by the competent authority.

By post: Private Bag X447,
Pretoria,
0001; or

By hand: Environment House
473 Steve Biko,
Arcadia, Pretoria,

Appeals must be submitted in writing to:

Mr Z Hassam, Director: Appeals and Legal Review, of this Department at the above mentioned addresses. Mr Hassam can also be contacted at:

Tel: (012) 399 9356
Email: Appealsdirectorate@environment.gov.za

Please note that in terms of section 43(7) of the National Environmental Management Act, 1998, an appeal under section 43 of that Act will suspend the environmental authorisation or any provision or condition attached thereto. In the instance where an appeal is lodged, you may not commence with the activity until such time that the appeal is finalised.

For guidance on appeals submitted to the Minister in terms of NEMA and the SEMAs, please find a copy of the guideline on the administration of appeals on the Department's website: (https://www.environment.gov.za/documents/forms#legal_authorisations).

Yours faithfully

Mr Sabelo Malaza
Chief Director: Integrated Environmental Authorisations
Department of Environmental Affairs
Date: 30/09/2015

Appendix B

Sensitivity Layout Plan

Final Site Layout Plan

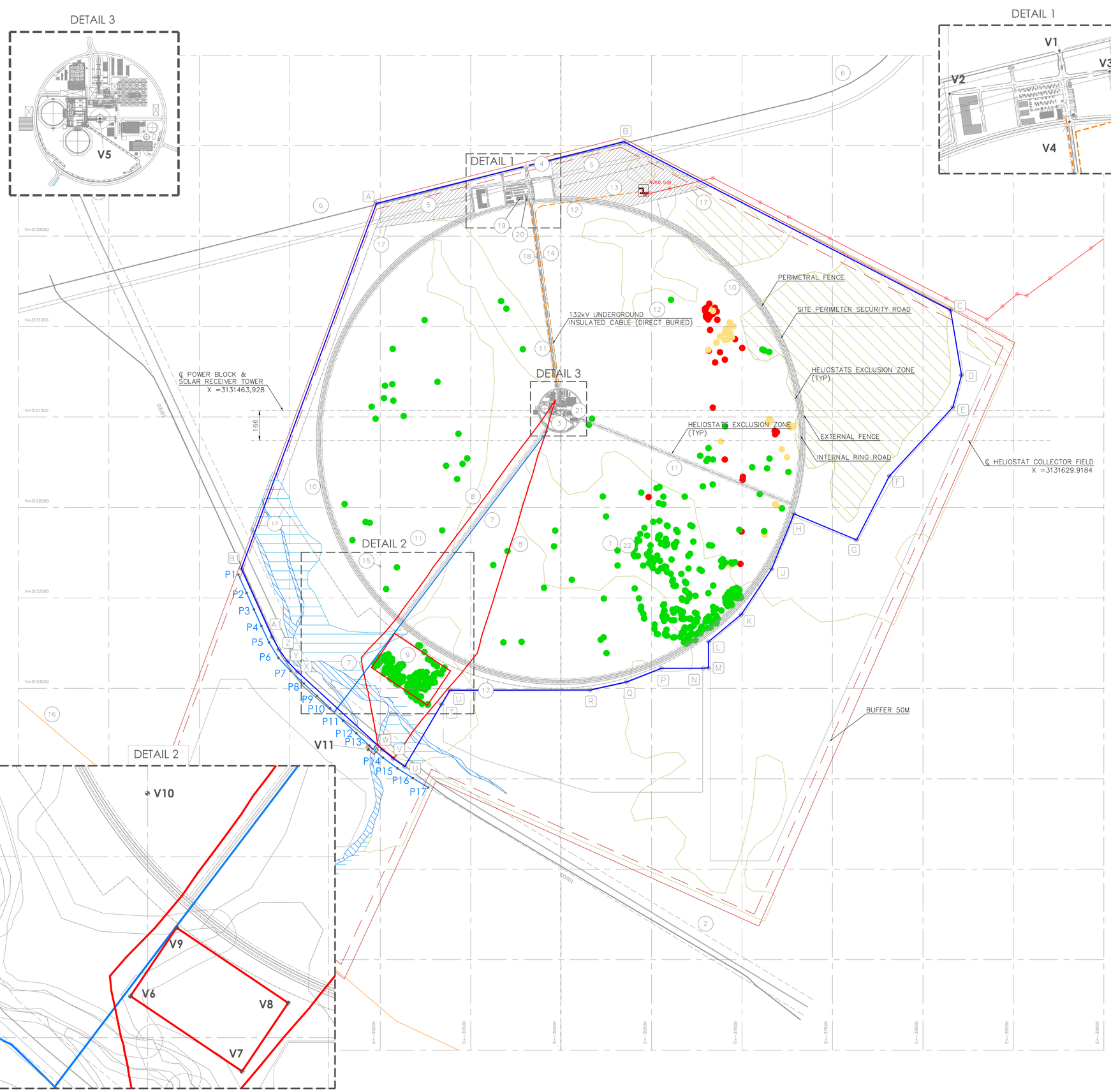

NOTES:

1. ARRANGEMENT OF ROADS, CABLEWAY AND PIPES SHOWN IN THIS DRAWING ARE PRLIMINARY AND WILL BE DEFINE LATER.
2. ALL UNITS REFERENCED IN THE PLAN ARE IN M.

LEGEND:

1. SOLAR FIELD
2. RAILWAY (50M BUFFER)
3. POWER BLOCK
   - ROAD AXIS RADIUS 120340
   - AREA (AXIS) 45496m2
4. ACCESS
5. MANCAMP OPTION (±1,5ha)
6. ROAD R-385
7. WATER PIPELINE ROUTE
8. WASTE WATER PIPELINE
9. EVAPORATION POND
10. PERIMETRAL ROAD
11. TRANSVERSAL ROAD
12. OVERHEAD LINE 132kV OHL
13. FACILITY METERING INSTALLATION
14. CABLES UP TO DELIVERY POINT
15. HERITAGE
16. OVERHEAD LINE 132kV OHL
17. PERIMETRAL FENCE
18. DUCT BANK
19. ADMINISTRATIVE BUILDING
20. VISITOR BUILDING
21. INTERNAL ROAD
22. HELIOSTAT MAINTENANCE PATHS

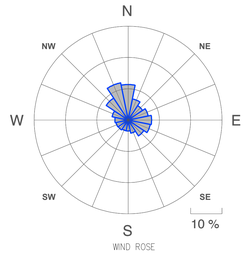

COORDINATES GAUSS CONFORM Lo. 23°(WGS84)

ACCESS		
VERTICE	Y	X
V1	-35807,1377	3130114,8612
V2	-35502,9314	3130233,9784
V3	-35945,7628	3130172,2352
V4	-35834,7867	3130311,3865
SOLAR RECEIVER TOWER		
VERTICE	Y	X
V5	-35995,9301	3131463,9280
EVAPORATION POND		
VERTICE	Y	X
V6	-34952,3380	3132885,1720
V7	-35260,7575	3133093,2080
V8	-35388,2490	3132904,1670
V9	-35079,8300	3132696,1580
HERITAGE PGS 06		
VERTICE	Y	X
V10	-34999,5060	3132324,8950
VAAL GAMAGARA CONNECTION		
VERTICE	Y	X
V11	-34933,8550	3133337,5331
PIPELINE		
VERTICE	Y	X
P1	-34215,267	3132370,0760
P2	-34261,2340	3132472,6310
P3	-34302,1370	3132563,9040
P4	-34343,0130	3132655,1460
P5	-34385,4440	3132745,5930
P6	-34437,0970	3132831,2330
P7	-34505,0240	3132903,7760
P8	-34577,5120	3132972,6690
P9	-34649,9980	3133041,5620
P10	-34722,4840	3133110,4550
P11	-34794,9690	3133179,3510
P12	-34867,4530	3133248,2150
P13	-34939,9360	3133317,1100
P14	-35015,1520	3133382,8740
P15	-35095,3440	3133442,4340
P16	-35180,1310	3133495,4210
P17	-35264,9450	3133548,4080

FLOODPLAINS (50M BUFFER)

MOUNTAIN WOODLAND (50M BUFFER)

NON-PERENNIAL STREAMS (15M BUFFER)

Olea Europea Subsp. Africana

Acacia Haematoxylon

Acacia Erioloba

CR TOWER COORDINATES		
	Y (m)	X (m)
GAUSS CONFORM Lo. 23° (WGS84)	-35995,9301	3131463,928

COORDINATES OF PLANT BOUNDARY REDSTONE		
POINT	Y (m)	X (m)
A	-34979.93	3130318.39
B	-36347.35	3129978.25
C	-38152.63	3130909.85
D	-38213.33	3131269.11
E	-38165.5	3131445.77
F	-37814.27	3131826.32
G	-37632.98	3132179.22
H	-37287.32	3132035.18
J	-37163.52	3132340.3
K	-36995.76	3132591.78
L	-36814.69	3132741.56
M	-36814.69	3132887.14
N	-36787.39	3132888.43
P	-36554.81	3132888.63
Q	-36361.36	3132964.44
R	-36160.62	3133008.9
S	-35385.03	3133009.43
T	-35339.05	3133087.62
U	-35135.9	3133431.58
V	-35072.65	3133388.43
W	-35013.38	3133339.23
Y	-34542.63	3132908.55
X	-34487.72	3132850.87
Z	-34440.44	3132785.487
A1	-34403.32	3132716.49
B1	-34232.33	3132337.91

0 250 500 mts

GRAPHIC SCALE

CONTAINS INFORMATION FOR THE DESIGN OF STRUCTURES SYSTEM OR COMPONENTS ..... YES ☒ NO ☐

VERIFICATION: N/A ☐ SUP. ☒ VERIFIER L1 ☐ L2 ☐

OWNER: ACWA POWER SOLARRESERVE

EPC CONTRACTOR: acciona

PROJECT: Concentrated Solar Power Redstone

FORMAT: A0

SCALE: 1:7.500

DRAWING TITLE: GENERAL ARRANGEMENT DEA SUBMISSION REDSTONE LAYOUT

DRAWING Nº

File:

SUBCONTRACTOR Nº

EMPRESARIOS AGRUPADOS

SHEET 1 OF 1

REV.

NOTES:

1. ARRANGEMENT OF ROADS, CABLEWAY AND PIPES SHOWN IN THIS DRAWING ARE PRLIMINARY AND WILL BE DEFINE LATER.
2. ALL UNITS REFERENCED IN THE PLAN ARE IN M.

LEGEND:

1. SOLAR FIELD
2. RAILWAY (50M BUFFER)
3. POWER BLOCK
   - ROAD AXIS RADIUS 120340
   - AREA (AXIS) 45496m2
4. ACCESS
5. MANCAMP OPTION (±1,5ha)
6. ROAD R-385
7. WATER PIPELINE ROUTE
8. WASTE WATER PIPELINE
9. EVAPORATION POND
10. PERIMETRAL ROAD
11. TRANSVERSAL ROAD
12. OVERHEAD LINE 132kV OHL
13. FACILITY METERING INSTALLATION
14. CABLES UP TO DELIVERY POINT
15. HERITAGE
16. OVERHEAD LINE 132kV OHL
17. PERIMETRAL FENCE
18. DUCT BANK
19. ADMINISTRATIVE BUILDING
20. VISITOR BUILDING
21. INTERNAL ROAD
22. HELIOSTAT MAINTENANCE PATHS

COORDINATES GAUSS CONFORM Lo. 23°(WGS84)

ACCESS		
VERTICE	Y	X
V1	-35807,1377	3130114,8612
V2	-35502,9314	3130233,9784
V3	-35945,7628	3130172,2352
V4	-35834,7867	3130311,3865
SOLAR RECEIVER TOWER		
VERTICE	Y	X
V5	-35995,9301	3131463,9280
EVAPORATION POND		
VERTICE	Y	X
V6	-34952,3380	3132885,1720
V7	-35260,7575	3133093,2080
V8	-35388,2490	3132904,1670
V9	-35079,8300	3132696,1580
HERITAGE PGS 06		
VERTICE	Y	X
V10	-34999,5060	3132324,8950
VAAL GAMAGARA CONNECTION		
VERTICE	Y	X
V11	-34933,8550	3133337,5331
PIPELINE		
VERTICE	Y	X
P1	-34215,267	3132370,0760
P2	-34261,2340	3132472,6310
P3	-34302,1370	3132563,9040
P4	-34343,0130	3132655,1460
P5	-34385,4440	3132745,5930
P6	-34437,0970	3132831,2330
P7	-34505,0240	3132903,7760
P8	-34577,5120	3132972,6690
P9	-34649,9980	3133041,5620
P10	-34722,4840	3133110,4550
P11	-34794,9690	3133179,3510
P12	-34867,4530	3133248,2150
P13	-34939,9360	3133317,1100
P14	-35015,1520	3133382,8740
P15	-35095,3440	3133442,4340
P16	-35180,1310	3133495,4210
P17	-35264,9450	3133548,4080

FLOODPLAINS (50M BUFFER)

MOUNTAIN WOODLAND (50M BUFFER)

NON-PERENNIAL STREAMS (15M BUFFER)

ROCKY OUTCROPS (50M BUFFER)

SHRUBVELD PLAINS

WOODLAND PLAINS & HILLS (50MBUFFER)

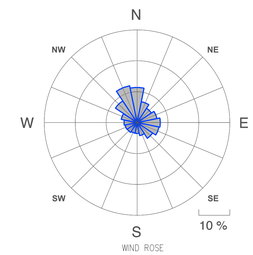

CR TOWER COORDINATES		
	Y (m)	X (m)
GAUSS CONFORM Lo. 23° (WGS84)	-35995,9301	3131463,928

COORDINATES OF PLANT BOUNDARY REDSTONE		
POINT	Y (m)	X (m)
A	-34979.93	3130318.39
B	-36347.35	3129978.25
C	-38152.63	3130909.85
D	-38213.33	3131269.11
E	-38165.5	3131445.77
F	-37814.27	3131826.32
G	-37632.98	3132179.22
H	-37287.32	3132035.18
J	-37163.52	3132340.3
K	-36995.76	3132591.78
L	-36814.69	3132741.56
M	-36814.69	3132887.14
N	-36787.39	3132888.43
P	-36554.81	3132888.63
Q	-36361.36	3132964.44
R	-36160.62	3133008.9
S	-35385.03	3133009.43
T	-35339.05	3133087.62
U	-35135.9	3133431.58
V	-35072.65	3133388.43
W	-35013.38	3133339.23
Y	-34542.63	3132908.55
X	-34487.72	3132850.87
Z	-34440.44	3132785.487
A1	-34403.32	3132716.49
B1	-34232.33	3132337.91

0 250 500 mts

GRAPHIC SCALE

PROPRIETARY INFORMATION

CONTAINS INFORMATION FOR THE DESIGN OF STRUCTURES SYSTEM OR COMPONENTS ..... YES ☒ NO ☐
VERIFICATION: N/A ☐ SUP. ☒ VERIFIER L1 ☐ L2 ☐

OWNER: ACWA POWER / SOLARRESERVE

EPC CONTRACTOR: acciona Industrial

PROJECT: Concentrated Solar Power Redstone

FORMAT: A0
SCALE: 1:7.500

DRAWING TITLE: GENERAL ARRANGEMENT
DEA SUBMISSION REDSTONE LAYOUT

DRAWING N°

File:

SUBCONTRACTOR N°

EMPRESARIOS AGRUPADOS

SHEET 1 OF 1

REV.

Appendix C

Alien Invasive Management Plan

ALIEN INVASIVE PLANT MANAGEMENT PLAN:

REDSTONE CSP FACILITY

PRODUCED FOR

ACWA POWER/SOLARRESERVE

BY

SIMON TODD CONSULTING

Simon.Todd@3foxes.co.za

MAY 2015

REDSTONE CSP:

ALIEN PLANT MANAGEMENT PLAN

Prepared by Simon Todd

May 2015

MANAGEMENT PLAN OBJECTIVES

The purpose of the Redstone Alien Plant Management Plan is to provide a framework for the management of alien and invasive plant species during the operation of the ACWA Power SolarReserve Redstone Solar Thermal Power Plant. The broad objectives of the plan includes the following:

- Ensure alien plants do not become dominant in parts or the whole site through the control and management of alien and invasive species presence, dispersal & encroachment.
- Initiate and implement a monitoring and eradication programme for alien and invasive species.
- Promote the natural recovery and re-establishment of indigenous species where possible in order to retard erosion and alien plant invasion.
- Provide an identification guide that can be used by management to identify and target alien species with appropriate control measures.

As there are already two existing solar PV projects in operation on the same property as the Redstone Solar Thermal Plant, this plan draws directly on observations of alien species identity and abundance within the existing PV plants. The footprint of the CSP is currently natural vegetation with few alien species present and so few inferences as to which alien species are likely to become problematic can be drawn directly from this. As the environment and construction-phase disturbance within the PV facilities is similar to that within the CSP footprint, similar alien species are likely to become a problem within the CSP plant and this is considered the most reliable indicator of likely alien species composition at the site.

It is assumed that the entire footprint of the CSP itself will be cleared of all vegetation during construction but that some level of low vegetation cover would be allowed to return and tolerated thereafter. In addition, there are likely to be some remaining intact fragments of natural vegetation within the facility which would require management. It is also important to note that alien species should also be managed around the periphery of the development and not just within the fenced-off facility.

PROBLEM & LEGISLATIVE BACKGROUND

Alien plants require management because they may impact biodiversity as well as the provision of ecosystem services which contribute to human livelihoods and well-being. In recognition of these impacts, South Africa has legislation in place which requires landowners to clear or prevent the spread of certain declared weeds from their properties. Within the context of the CSP Plant, alien plant invasion can be problematic as they may increase the risk of fire within the plant, spread into the surrounding natural vegetation or be more costly or difficult to control than the indigenous grassland.

In terms of the legislation, the Conservation of Agricultural Resources Act (CARA, Act 43 of 1983), as amended in 2001, requires that landusers clear *Declared Weeds* from their properties and prevent the spread of *Declared Invader Plants* on their properties. Table 3 of CARA lists all declared weeds and invader

plants that must be controlled. Alien plants are divided into 3 categories based on their risk and potential impact as an invader.

- Category 1 - These plants must be removed and controlled by all land users. They may no longer be planted or propagated and all trade in these species is prohibited.
- Category 2 – These plants pose a threat to the environment but nevertheless have commercial value. These species are only allowed to occur in demarcated areas and a landuser must obtain a water use licence as these plants consume large quantities of water.
- Category 3 – These plants have the potential of becoming invasive but are considered to have ornamental value. Existing plants do not have to be removed but no new plantings may occur and the plants may not be sold.

The following guide is a useful starting point for the identification of alien species:

Bromilow, C. 2010. *Problem Plants and Alien Weeds of South Africa*. Briza, Pretoria.

RECOMMENDED MANAGEMENT PRACTICE & CLEARING METHODS

Alien species are adept at taking advantage of disturbance and many of their traits are linked to this ability. This usually includes the ability to produce large amounts of seed or being flexible in terms of their size, growth form or reproductive strategy. Alien plant control strategies therefore need to focus on these key attributes while management practices need to ensure that they do not create circumstances under which alien species are encouraged or can thrive. Perhaps the most important aspects in this regard are minimising disturbance and ensuring the retention of indigenous vegetation as far as possible.

It is important to note that it is not possible or practical to prevent alien species from entering the site as seed. There are many alien species present in the immediate area along roadsides and other disturbed areas. The relatively large amount of disturbance created during construction will render the site vulnerable to invasion for some time to come and it is likely that many alien species from the local species pool will invade the site over time.

The following general principles and observations which underlie or impact the alien management plan can be made regarding the likely trajectories of vegetation change at the CSP facility:

- There is likely to be a progression of alien species presence and abundance at the site over time. Initially, alien species are likely to be a significant and persistent problem due to the high levels of disturbance present at the site following construction. Most alien species are poor competitors and the lack of indigenous vegetation cover will encourage the growth of alien species. Provided that alien species are controlled in a sensitive manner, a cover of perennial grasses is likely to

become well established with a couple of years. This should discourage alien species which, with additional control, should become considerably less conspicuous within 5 years. Some more competitive alien species may become established at this time and alien control strategies may need to be adapted over time to address the new problem species.

- Alien species presence will vary from year to year in terms of abundance, density and the identity of species present. This can be ascribed largely to variation in rainfall timing and amount, which will favour a different suite of species each year. Therefore, occasional outbreaks of certain species is not likely to be cause for concern, whereas a persistent high or increasing abundance of a species is indicative of a species where control may be required.
- Management practices will impact indigenous as well as alien species. The dominant management practice at the site is likely to be mowing to control vegetation height and fire risk within the facility. Regular mowing encourages the growth of low and creeping forms and discourages tall growth forms. This principle is well demonstrated by garden lawns or sports fields where most alien species or weeds in the lawn can be eradicated simply through regular mowing. Within the context of the facility, the grass *Cynodon dactylon* is likely to be key as this species is able to tolerate mowing or heavy grazing and is likely to increase under a regular mowing regime.

Without being too prescriptive as the exact methods and approaches to be used, the following general management practices should be encouraged or strived for:

- Mowing excess vegetation by hand, for example with a weedeater, generates the lowest level of associated disturbance and is usually the preferred method for vegetation control. However, the footprint of the facility is very large and this is not likely to be practical. As a result, mechanical means such as using a tractor with mower is also considered acceptable.
- There is a target height to which vegetation should be cut. If the vegetation is cut too low, then recovery of the grass layer will be slow and this may encourage erosion and an increase in alien invasion. On the other hand, if the vegetation is not cut low enough, then recovery will be rapid and frequent follow-up control may be required. It is recommended that the target height for vegetation after mowing should be not less than 10 cm.
- The maintenance of a fire-break around the facility is an important safety control and the service road around the perimeter of the facility should be maintained free of vegetation. Within the facility itself, some vegetation recovery along the internal roads should be considered acceptable.
- Where dense stands of alien species have established that cannot be controlled by manual means, some use of herbicides may be acceptable. However, the associated safety precautions should be taken with regards to the appropriate application methods as well as the use of personal safety equipment (These are outlined in greater detail below). The best-practice clearing method for each species identified should be used. The preferred clearing methods for most alien species can be obtained from the DWAF Working for Water Website. http://www.dwaf.gov.za/wfw/Control/
- The effectiveness of vegetation control varies seasonally and this is also likely to impact alien species. Control early in the wet season will allow species to re-grow and follow-up control is likely to be required. It is tempting to leave control till late in the wet season to avoid follow-up control. However, this may allow alien species to set seed before control and hence will not

contribute towards reducing alien species abundance. Therefore, vegetation control should be aimed at the middle of the wet season, with a follow-up event towards the end of the wet season. There are no exact dates that can be specified here as each season is unique and management must therefore respond according to the state and progression of the vegetation.

- Alien management is an iterative process and it may require repeated control efforts to significantly reduce the abundance of a species. This is often due to the presence of large and persistent seed banks. However, repeated control usually results in rapid decline once seed banks become depleted.
- Some alien species such as *Opuntia* (Prickly Pear) and trees such as *Prosopis* (Mesquite) are best individually pulled by hand when young and in the case of *Opuntia* removed from the site as the leaves are able to root and grow again.
- It is expected that regular vegetation control to reduce plant biomass within the array field will be conducted and that this will be timed so as to coincide with the critical growth phases of the most important alien species. This will significantly reduce the cost of alien management as this should contribute towards the control of the dominant alien species and additional targeted control will be required only for a limited number of species.

BASIC GUIDELINES ON THE USE OF HERBICIDES FOR ALIEN CONTROL

Although it is usually preferable to use manual clearing methods where possible, such methods may create additional disturbance which further stimulates alien invasion and may also be ineffective for many woody species which resprout. Where herbicides are to be used, the impact of the operation on the natural environment should be minimised by observing the following:

- Area contamination must be minimised by careful, accurate application with a minimum amount of herbicide to achieve good control.
- All care must be taken to prevent contamination of any water bodies. This includes due care in storage, application, cleaning equipment and disposal of containers, product and spray mixtures.
- Equipment should be washed where there is no danger of contaminating water sources and washings carefully disposed of in a suitable site.
- To avoid damage to indigenous or other desirable vegetation, products should be selected that will have the least effect on non-target vegetation. Broad-spectrum herbicides should only be used in extreme cases.
- Coarse droplet nozzles should be fitted to avoid drift onto neighbouring vegetation.
- The appropriate health and safety procedures should also be followed regarding the storage, handling and disposal of herbicides.

For all herbicide applications, the following guidelines should be followed:

Working for Water: Policy on the Use of Herbicides for the Control of Alien Vegetation.

ALIEN PLANT MONITORING & CONTROL SCHEDULE

In order to implement the alien plant management plan, a monitoring and control schedule is required to evaluate the presence and on-going control of alien plants within the facility. This is not intended to be highly onerous, but simple provides a guideline on the frequency with which alien plants should be monitored and what parameters are likely to be important. Monitoring could be conducted more frequently if desired or deemed necessary.

The following monitoring and evaluation actions should take place as part of the alien management plan.

Monitoring Action	Indictor	Timeframe
Document alien species distribution and abundance over time at the site	Alien plant distribution map or records of which sections of the site alien species were observed to be a problem in and which species were present.	Biannually for the first three years, annually thereafter Monitoring should take place before mowing or at the peak of alien growth then they are most conspicuous.
Document alien plant control measures implemented & success rate achieved	Records of control measures and their success rate. A decline in alien distribution and cover over time at the site	Biannually for the first three years, annually thereafter
Document rehabilitation measures implemented and success achieved in problem areas	Decline in vulnerable bare areas over time	Biannually for the first three years, annually thereafter

CONCLUSIONS AND RECOMMENDATIONS

- The problem species present at the site will change over time and as a result, the alien plant management plan needs to accommodate these changes as they occur and therefore some monitoring, feedback and evaluation of the plan on an on-going basis is required.

- There are a number of Category 1 listed alien invaders are present in the area and within the adjacent PV facilities. These species have a demonstrated capacity to invade and disrupt

ecosystems and the management of alien species at the site should pay specific attention to these species.

- There are some alien species which are present in the area which are naturalised and are not likely to pose a significant threat and low levels of abundance of such species can be tolerated. However, the abundance of these species should be monitored to ensure that they do not become a problem.

- This management plan includes a guide to aid in the identification of alien species likely to be encountered at the site. This is based on the species observed at the adjacent PV facilities. However, additional species may be present or may invade in the future and so the management of the site should be aware that the guide is not exhaustive and that attention should be paid to the potential presence of additional species.

- In the short-term, soil disturbance is likely to be the dominant driver of alien invasion at the site. While, in the long-term the distribution of runoff is likely to be a key driver as those areas which receive water will be wetter and likely to contain a higher alien abundance. With large parts of the site being cleared of vegetation and extensive tracts of hardened surface present, it is likely that the development will generate large amounts of runoff. The fate, distribution and management of this runoff is likely to be an important contributing factor to alien plant species abundance within the areas which receive the runoff.

- As disturbance is the major initial driver of alien species invasion, keeping the disturbance footprint to a minimum is a key element in reducing alien abundance. Wherever possible, the indigenous vegetation should be encouraged to return as this will significantly reduce the likelihood of alien invasion.

ALIEN & PROBLEM SPECIES IDENTIFICATION GUIDE ·

IDENTIFICATION OF ALIEN SPECIES

A list of all the alien species that were observed at the adjacent PV sites is detailed below. This table includes the English and Afrikaans common names for the species as well as whether or not the species is a listed alien under CARA. The list includes some weedy indigenous species as these can become a problem or are frequently mistaken for alien species.

Following the list a photographic guide to the common alien species of the area is included. Each species is rated and colour coded according to the perceived risk it poses as an alien invasive and the level of control that should be exercised. It is important to note that the list and guide is not exhaustive as it is impossible to predict which alien species may invade the site. The list and guide includes those species which are known to occur at the site and which are likely to be a problem, but the list should be updated from time to time as additional alien species are encountered at the site.

List of alien species observed in the vicinity of the Redstone Solar Thermal Facility and which are likely to become a problem at the site

Family	Species	English name	Afrikaans name	Category
Amaranthaceae	*Alternanthera pungens*	Paperthorn	Kakiebubbeltjie	Not Listed
Amaranthaceae	*Amaranthus hybridus*	Common Pigweed	Kaapse Misbredie	Not Listed
Amaranthaceae	*Amaranthus viridus*	Slender Amarath	Skraal Misbredie	Not Listed
Amaranthaceae	*Gomphrena celosioides*	Globe Amaranth	Mierbossie	Not Listed
Amaranthaceae	*Guilleminea densa*	Carrot Weed		Not Listed
Apiaceae	*Ciclospermum leptophyllum*	Wild Celery	Wildeseldery	Not Listed
Asclepiadaceae	*Asclepias fruticosa*	Shrubby Milkweed	Melkbos	Not Listed
Asteraceae	*Bidens pilosa*	Blackjack	Knapsekerel	Not Listed
Asteraceae	*Cirsium vulgare*	Scotch Thistle	Speerdissel	1
Asteraceae	*Conyza bonariensis*	Fleabane	Skraalhans	Not Listed
Asteraceae	*Lactuca seriola*	Wild Lettuce	Wildeslaai	Not Listed
Asteraceae	*Schkuria pinnata*	Dwarf Marigold	Klainkakiebos	Not Listed
Asteraceae	*Senecio consanguineus*	Stravation Senecio	Hongerbos	Not Listed
Asteraceae	*Sonchus oleraceus*	Sowthistle	Sydissel	Not Listed
Asteraceae	*Tagetes minuta*	Khakiweed	Kakiebos	Not Listed
Asteraceae	*Taraxacum officinale*	Common Dandelion	Perdeblom	Not Listed
Asteraceae	*Tragopogon porrifolius/dubius*	Goat's Beard	Bokbaard	Not Listed
Asteraceae	*Verbena bonariensis*	Purple Top	Blouwaterbossie	Not Listed
Asteraceae	*Xanthium spinosum*	Spiny Cocklebur	Boetebossie	1
Brassicaceae	*Lepidium africanum*	Pepperweed	Peperbossie	Not Listed
Brassicaceae	*Sisymbrium thellungi*	Wild Mustard	Wildemosterd	Not Listed
Cactaceae	*Opuntia ficus indica*	Prickly Pear	Turksvy	1
Cannabaceae	*Cannabis sativa*	Cannabis	Dagga	Not Listed
Chenopodiaceae	*Atriplex semibaccatta*	Australian Saltbush	Brakbossie	Not Listed
Chenopodiaceae	*Chenopium carinatum*	Green Goosefoot	Groenhondebossie	Not Listed
Chenopodiaceae	*Chenopodium album*	White Goosefoot	Withondebossie	Not Listed
Chenopodiaceae	*Salsola kali*	Russian Tumbleweed	Rolbossie	Not Listed
Fabaceae	*Medicago lanciniata*	Little Burweed	Klitsklawer	Not Listed
Fabaceae	*Prosopis glandulosa*	Honey Mesquite	Heuningprosopis	2
Malvaceae	*Malva parviflora*	Mallow	Kiesieblaar	Not Listed
Onagraceae	*Oenothera indecora/stricta*	Evening Primrose	Nagblom	Not Listed
Papaveraceae	*Argemone ochroleuca*	Mexican Poppy	Bloudissel	1
Polygonaceae	*Emex australis*	Spiny Emex	Kaapse Dubbeltjie	Not Listed
Polygonaceae	*Polygonum aviculare*	Prostrate Knotweed	Voelduisendknop	Not Listed
Polygonaceae	*Rumex crispus*	Curly Dock	Tongblaar	Not Listed
Solanaceae	*Datura ferox*	Large Thorn Apple	Groot Stinkblaar	1
Solanaceae	*Nicotiana glauca*	Wild Tobacco	Wildetabak	1
Zygophyllaceae	*Tribulis terrestris*		Dubbeltjie	Not Listed

AMARANTHACEAE – Amaranthus viridis

Amaranthus viridis

It is likely that there are several species of *Amaranthus* present in the area which may become problematic, they are however all very similar in appearance and impact. Most species do not grow very tall as they are weedy and sprawling. As a result, they are not likely to be a significant problem, but they can become quite abundant, especially in wetter situations and are also quite persistent.

Concern Rating:

The overall level of threat posed by this and similar species is considered to be moderate. Control should be exercised where this species becomes dominant, but occasional plants are not likely to be considered a significant concern.
Broadleaf herbicides are used to control this species in cropland situations.

AMARANTHACEAE - Gomphrena celosioides

Gomphrena celosioides

Gomphrena celosioides is a South American weed that has become naturalised on South Africa. It is not usually a significant problem as it is low-growing and does not usually out-compete other vegetation. It may become common in areas where there is additional disturbance and moisture present.

The overall level of threat posed by this species is considered to be low. Specific control is unlikely to be required. It can be controlled manually by pulling if required.

AMARANTHACEAE - Alternanthera pungens

Alternanthera pungens

Alternanthera pungens is another South American weed that has become naturalised on South Africa. It is more of an irritation than a significant problem as the seeds stick to shoes and are easily spread. It can become a problem on bare areas where it is difficult to eradicate. As it can grow quite dense it can supress other species.

The overall level of threat posed by this species is considered to be generally low. Specific control may be required in bare or sparely vegetation areas, but it is unlikely to be a problem where there is a good cover of grass. It can be controlled manually by pulling if required.

APIACEAE - Ciclospermum leptophyllum

Ciclospermum leptophyllum

Ciclospermum leptophyllum is of South American origin. It is not usually a significant problem in arid areas and it is not likely that the site is wet enough for this species to grow sufficiently well or large enough to pose a significant problem.

The overall level of threat posed by this species is considered to be low. Specific control are not likely to be required and a low abundance of this species at the sites can be tolerated.

ASCLEPIADACEAE - Asclepias fruticosa

Asclepias fruticosa

Asclepias fruticosa is an indigenous weed. It can commonly be seen along road sides across the country. It can become a problem in disturbed sites such as old lands and may become a problem at the sites due to its large size.

The overall level of threat posed by this species is considered to be low. Due to its large size, it takes more than one season to reach maturity and can be relatively easily controlled manually.

ASTERAEAE - Bidens pilosa

Bidens pilosa - Fruit

Bidens pilosa - Flowers

Bidens pilosa is common weed of disturbed places and the seeds that cling to clothes or animals are well known. Under the right circumstances this species can form fairly dense stands and it is quite tolerant of grass as a competitor. Due to its height, which can exceed 1m, this species is a potential problem at the site that should be monitored.

The overall level of threat posed by this species is considered to be moderate. However, as it is quite tall, regular mowing will quickly eradicate this species if mowing is done often enough.

ASTERAEAE - Cirsium vulgare

Cirsium vulgare

Cirsium vulgare is common weed of disturbed places and old lands. It is however usually associated with relatively moist environments and it is only likely to be a potential problem where there is large amounts of run-on moisture available. It is large and regular mowing will prevent this species from becoming a significant problem. It can however also grow as a rosette flat on the ground and may persist in mowed areas in this manner and so manual clearing may be necessary.

	The overall level of threat posed by this species is considered to be moderate to low. It can be controlled manually quite easily if required.

ASTERAEAE - Conyza bonariensis

Conyza bonariensis

Conyza bonariensis is common weed of disturbed places such as roadsides and old lands. It is ubiquitous and very difficult to totally eradicate. Due to its' height, which can exceed 1m, this species is a potentially problem at the sites that should be monitored.

The overall level of threat posed by this species is considered to be moderate. It is resistant to mowing as young plants form a rosette. In cultivated situations broadleaf herbicides are used to control Conyza spp.

ASTERAEAE - Lactuca seriola

Lactuca seriola

Lactuca seriola is a wild relative of lettuce and is a common weed of disturbed places. This species can form fairly dense stands and it is quite difficult to eradicate once established. Due to its height, which can exceed 1m, this species is a potentially problem at the sites that should be monitored.

The overall level of threat posed by this species is considered to be moderate. It is difficult to control. In cultivated situations herbicides are used to control this species.

ASTERAEAE - Schkuria pinnata

Schkuria pinnata

Schkuria pinnata is common weed of disturbed places such as roadsides and fields. It is however uncommon within intact vegetation and it is not likely to be a strong competitor. It does not usually grow very large and it is unlikely that this species will be a significant problem at the site.

The overall level of threat posed by this species is considered to be low. With regular mowing the abundance of this species is likely to be kept to a low level.

ASTERAEAE - Senecio consanguineus

Senecio consanguineus

Senecio consanguineous is an indigenous species common in disturbed veld. It is an indicator of disturbance or overgrazing and it is likely that the abundance of this species at the site will decline over time as the grass layer recovers.

	The overall level of threat posed by this species is considered to be low. The plants are not usually large and it is not alien.

ASTERAEAE - Sonchus oleraceus

Sonchus oleraceus

Sonchus oleraceus is common weed of disturbed places. It may be difficult to control, but manual clearing of plants before they have flowered may be most effective.

	The overall level of threat posed by this species is considered to be moderate to low. A good cover of grass will supress this species and with some control, it is likely to decline over time.

ASTERAEAE - Tagetes minuta

Tagetes minuta

Tagetes minuta is common weed of disturbed places and has a very distinctive and strong smell when crushed. Control of this species is likely to be difficult as it is plastic with regards to germination and growth. A good cover of grass is however likely to retard the germination of this species and it is likely to only become a problem if bare areas persist within the site.

The overall level of threat posed by this species is considered to be moderate. Controlling this species with normal vegetation control mowing may not be successful and it should be monitored in case additional control measures need to be implemented.

ASTERAEAE - Tragopogon porrifolius

Tragopogon porrifolius

Tragopogon porrifolius is common weed of disturbed places, but is not likely to become a significant problem at the sites as it is relatively small and is not likely to outcompete indigenous vegetation.

	Although this species has a thick taproot which makes it difficult to control manually or with herbicides, it is not likely to become a significant problem at the sites and is considered a low risk species.

ASTERAEAE - Verbena bonariensis

Verbena bonariensis

Verbena bonariensis is common weed of disturbed places such as roadsides. It can sometimes form fairly dense stands and as it quite tall, it is likely to shade the panels.

The overall level of threat posed by this species is considered to be moderate. It also lives for more than 1 year but appears to reproduce relatively slowly and could probably be controlled manually if required.

ASTERAEAE - Xanthium spinosum

Xanthium spinosum

Xanthium spinosum was the first declared weed in South Africa and is a Category 1 invader. It has tough burrs that stick to clothes or animals. It should be controlled whenever this plant is observed as large populations can be difficult to eradicate.

The overall level of threat posed by this species is considered to be moderate to high. It is a Category 1 invader and requires intensive control to eradicate. It is considered a significant threat, but if disturbance levels are kept as low as possible then it likely that this species will not be a big problem.

BRASSICACEAE - Sisymbrium thellungi

Sisymbrium thellungi

Sisymbrium thellungi or wild mustard can grow to 1m which makes it a potential problem. Under the dry conditions at the sites, it however rarely likely to reach this size except in wetter places.

	The overall level of threat posed by this species is considered to be moderate to low. Under the dry conditions prevalent at the sites, it does not appear to be a very strong competitor and it is likely that manual control of occasional large plants will be sufficient to control this plant.

CACTACEAE - Opuntia ficus indica

Opuntia ficus-indica

Opuntia humifusa

Cylindropuntia imbricata

Prickly pears are likely to be brought onto the sites by birds and other animals which feed on the fruits. As these plants can reproduce from leaves as well, plants need to be poisoned or removed to be killed. All *Opuntia* species are Category 1 invaders and must be controlled.

Although it is likely that these species will occasionally need to be controlled, they are relatively slow-growing and can easily be manually within the context of the Plant.

CANNABACEAE - Cannabis sativa

Cannabis sativa

Cannabis does not normally grow under the arid conditions that characterise the site but it is possible that seed will be brought onto the site during construction. Even if some plants are present after construction, it is highly unlikely that the populations will persist.

	The overall level of threat posed by this species is considered to be Low. Although plants can grow large, they will not do so in an arid environment and it is likely that any populations present will die out naturally.

CHENOPODIACEAE - Atriplex semibaccatta

Atriplex semibaccatta

Atriplex semibaccatta is a naturalised Australian weed common in semi-arid areas. Although it occasionally forms dense patches, it is not considered a significant problem as grazing animals usually utilise it to some degree. Within the context of the Plant, it is not likely to be a significant problem due to its low stature.

	The overall level of threat posed by this species is considered to be low. It is naturalised and does not usually invade disturbed areas to a large degree.

CHENOPODIACEAE - Chenopodium album

Chenopodium album

Chenopodium carinatum

Chenopodium album and *carinatum* are similar weedy species of annual or biennial forbs. They can grow over 1m tall under good conditions and as a result may pose a potentially problem at the sites. They are not usually highly invasive and are not likely to invade areas with intact ground cover.

The overall level of threat posed by this species is considered to be low. Although these species can grow quite large, they are not usually highly invasive in less disturbed environments. Large plants can be controlled manually if necessary.

CHENOPODIACEAE - Salsola kali

Salsola kali

Sasola kali is a widespread weed of disturbed places. The shrubs come loose from the soil when dry and roll around, packing up against fences sometimes pushing them over with the force of the wind. This species is a potentially problem at the site that should be monitored.

The overall level of threat posed by this species is considered to be moderate to high. This species can be difficult to eradicate and it can also cause problems when it rolls around. It can be very persistent. It should be cleared manually while still green, before the seed has been set.

MALVACEAE - Malva parviflora

Malva parviflora

Malva parviflora can act as an annual or a perennial. Although it can grow quite large, it is unlikely to do so on a regular basis at the site. However, it should be controlled when observed as established populations can be difficult to eradicate.

The overall level of threat posed by this species is considered to be moderate. It is flexible, adapting its growth form to be flat or upright depending on the conditions.

PAPAVERACEAE - Argemone ochroleuca

Argemone ochroleuca

Argemone ochroleuca is a Category 1 invader and should be controlled. This spiny plant can be a nuisance in disturbed areas and it is highly likely that this species will need to be controlled at the Site.

The overall level of threat posed by this species is considered to be high. It can be difficult to eradicate. However if populations are controlled effectively immediately after construction, then it is unlikely to build up to problem proportions.

POLYGONACEAE - Polygonum aviculare

Polygonum aviculare

Polygonum aviculare usually grows on open disturbed places. It is usually sprawling or low-growing and it is not likely to become a significant problem at the sites. It is not highly invasive and is likely to occur predominantly along the sides of the roads and other places with little other vegetation cover.

	The overall level of threat posed by this species is considered to be low. It is not highly invasive and does not grow very large. Specific control is not likely to be required.

POLYGONACEAE - Rumex crispus


Rumex crispus

Rumex crispus usually occurs in moist places and will probably benefit from any runoff from the site. As it is associated with moist habitats, it is not likely to be a significant problem and any large plants can be cleared manually.

	The overall level of threat posed by this species is considered to be low. It is associated with wetter environments and is therefore likely to be associated with places with receive runoff from other areas.

SOLANACEAE - Datura ferox

Datura ferox

Datura ferox is common in disturbed places such as fields, but also in natural vegetation around watering points and other disturbance. It is a Category 1 invader and should be cleared. Although it is annual, it can grow to more than a meter and has proven to be problematic within the adjacent PV facilities.

The overall level of threat posed by this species is considered to be high. It is a demonstrated problem in the country as well as within the adjacent PV sites. It produces a lot of seed and can be hard to control, but mowing at the appropriate time of year should be effective. Encouraging the return of the grass layer will also discourage this species.

SOLANACEAE - Nicotiana glauca

Nicotiana glauca

Nicotiana glauca usually occurs in river beds and on floodplains, but will also grow in other situations were sufficient moisture gathers. Although it is a Category 1 invader, it is large and conspicuous and as such should be relatively easily controlled within the Site.

The overall level of threat posed by this species is considered to be moderate. Although it is serious invader in some habitats, it is not likely to become a significant problem within the Site as it should be easy to control manually as it is not currently abundant in the area.

ZYGOPHYLLACEAE - Tribulis terrestris

Tribulis terrestris

Tribulis terrestris is an indigenous weed characteristic of disturbed ground. Although it is likely to increase at the site, where it is likely to be considered a nuisance due to its thorny seeds, ecologically its presence is not highly significant.

	The overall level of threat posed by this species is considered to be moderate to low. Although it may increase rapidly and colonise bare areas, it is not alien and does not pose an ecological threat. Plants can be cleared manually during flowering from bare ground where this species typically dominates

FABACEAE – Prosopis glandulosa

Prosopis glandulosa, pods and inflorescences

Prosopis glandulosa is already present within the affected area and is likely to become a potential problem in areas which receive runoff from the facility. This tree is a significant problem in large parts of the Northern Cape and once established, the dense stands that develop can be very difficult to eradicate. Category 2 invader.

The overall level of threat posed by this species is considered to be moderate. Although it is serious invader in some habitats, it would only be likely to become a problem in wetter areas, where it should be controlled regularly with manual clearing and the application of cut-stump arboricide treatment.

Appendix D

Plant Rescue and Protection Plan

PLANT RESCUE & PROTECTION PLAN:

ACWA POWER SOLARRESERVE REDSTONE SOLAR THERMAL POWER PLANT, REMAINDER OF THE FARM 469, POSTMASBURG, NORTHERN CAPE PROVINCE

PRODUCED FOR ACWA POWER

SIMON TODD CONSULTING

Simon.Todd@3foxes.co.za

Revised December 2015

DECLARATION OF CONSULTANTS' INDEPENDENCE

I Simon Todd, as the appointed independent specialist hereby declare that I:

- act/ed as the independent specialist in this application;
- regard the information contained in this report as it relates to my specialist input/study to be true and correct, and
- do not have and will not have any financial interest in the undertaking of the activity, other than remuneration for work performed in terms of the NEMA, the Environmental Impact Assessment Regulations, 2010 and any specific environmental management Act;
- have and will not have no vested interest in the proposed activity proceeding;
- have disclosed, to the applicant, EAP and competent authority, any material information that have or may have the potential to influence the decision of the competent authority or the objectivity of any report, plan or document required in terms of the NEMA, the Environmental Impact Assessment Regulations, 2010 and any specific environmental management Act;
- am fully aware of and meet the responsibilities in terms of NEMA, the Environmental Impact Assessment Regulations, 2010 (specifically in terms of regulation 17 of GN No. R. 543) and any specific environmental management Act, and that failure to comply with these requirements may constitute and result in disqualification;
- have provided the competent authority with access to all information at my disposal regarding the application, whether such information is favourable to the applicant or not; and
- am aware that a false declaration is an offence in terms of regulation 71 of GN No. R. 543.

Note: The terms of reference must be attached.

Simon Todd Pr.Sci.Nat 400425/11.

BACKGROUND & PURPOSE

ACWA power has appointed Simon Todd Consulting to provide a pre-construction walk-through of the ACWA Power SolarReserve Redstone Solar Thermal Power Plant (hereafter the Project). As part of this work a Plant Rescue and Protection Plan is required for the development of the CSP. The purpose of the Plant Rescue and Protection Plan is to allow for the maximum transplant and conservation of important species from areas to be transformed. The Plan details the location and identity of species of conservation concern that will be affected by the development. The GPS locations of all species of concern are included in the report so that the affected plants and other features of significance can be located in the field prior or during construction as necessary.

The terms of reference for the plan are as follows:

- Identification of listed and protected plant species within the development footprint as required by the EMP and for permitting requirements.
- GPS locations of listed and protected plant species.
- Density and size of listed and protected plant species
- GPS locations of any fauna habitats or features that may need to be avoided such as active burrow systems of protected species etc.
- Photographs of sensitive features where necessary.
- Demarcate or recommend conservation/preservation measures for any identified ecologically 'sensitive' and/or protected species and areas; and Incorporation of all Provincial and National Department requirements and best practice.
- Delineation of roles and responsibilities with respect to the implementation of the action items identified in the Report.

RELEVANT ASPECTS OF THE DEVELOPMENT

The development is proposed on the remainder of the Farm 469, Hay Distrct (registration), about 30km east of Postmasburg in the Northern Cape Province. The Project consists of a central tower receiver surrounded by an heliostat field of approximately 800ha. In addition to the heliostat field, there are also service roads, laydown areas, construction camps and evaporation ponds.

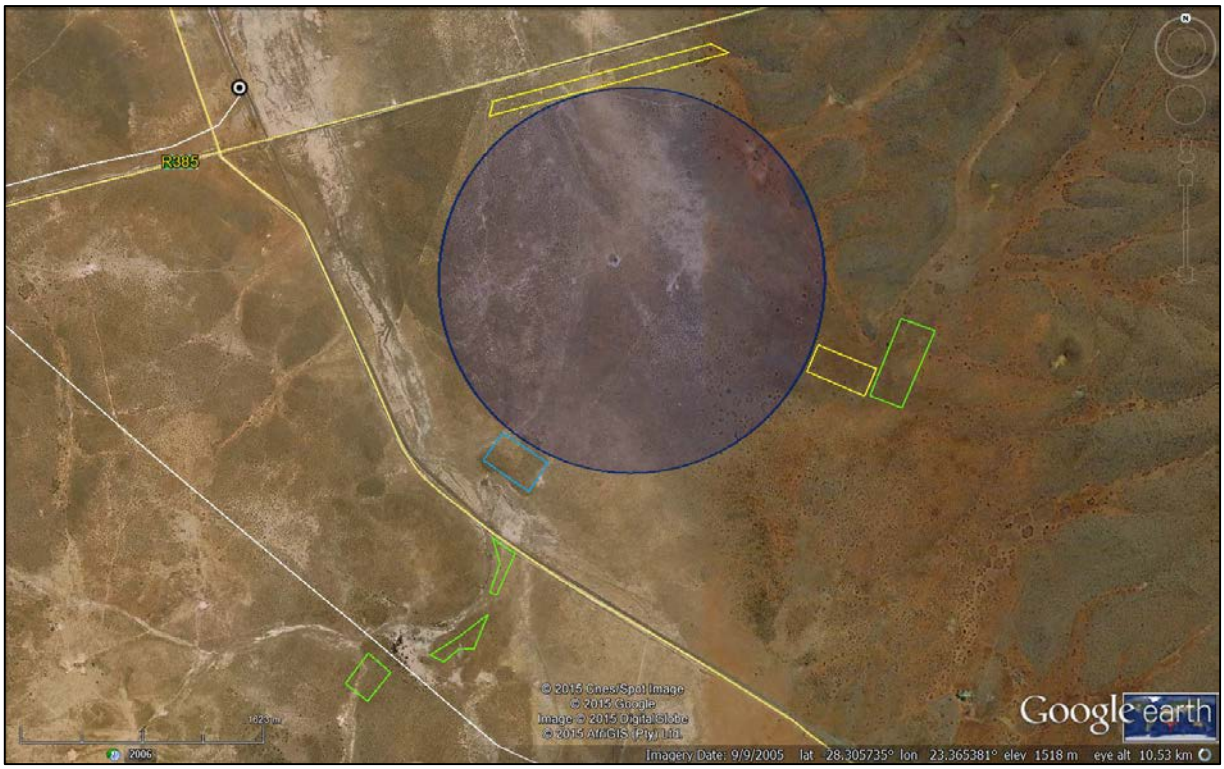

Figure 1. Layout of the ACWA Power SolarReserve Redstone Solar Thermal Power Plant with associated infrastructure. The Project is illustrated in blue with the evaporation ponds in blue while laydown areas are in yellow and management camps in yellow. It is important to note that the satellite image is several years old and does not show the two completed 75MW PV facilities which are also present at the site and which take up a large area to the east and south-east of the Project area.

APPROACH & WALK-THROUGH

The walk-through of the facility was conducted over 5 days from the 27th of April 2015 to the 1st of May 2015. Within the Project area and the associated infrastructure, the footprint was walked in a non-random manner and all species of conservation concern present were recorded. As such, for all large species, the results are actual numbers of affected individuals and are not estimates. As the density of listed species across the development area is not even, the density of transects is similarly concentrated within areas of high density. Some parts of the site have a low density of listed and protected species and within these areas walked transects are spaced sufficiently close that any listed species present could still be observed and recorded. A total of 67km were walked within the Project and associated infrastructure. This is beyond what is normally required for a walk-through and exceeds the recommendations for walk-through studies as provided by both DAFF and NC-DENC.

WALK-THROUGH RESULTS

Project & Associated Infrastructure

A total of 473 observations were made within the heliostat field footprint. This is dominated by *Olea europea* subsp. *africana* as well as relatively large amounts of *Acacia erioloba* and *Acacia haematoxylon*. Each of these species is clumped within certain parts of the site. Some such as *Acacia erioloba* and *Acacia haematoxylon* are restricted to a relatively small area where they are associated with specific soil conditions. Others such as *Boophone disticha* or *Brunsvigia radulosa* are fairly evenly spread across the site at low density. The density of listed species within the laydown and management areas is low. Some of these did not require a walk-through as they fall within the boundaries of the existing PV facilities at the site and were within areas that had already been cleared. The evaporation pond site had a disproportionate number of listed species within its footprint. There were 211 *Olea* trees within the footprint of the evaporation ponds which have an area of less than 10ha, this compares to 340 trees within the footprint of the CSP which has a footprint of more than 800ha. Therefore the density of Olea trees within the evaporation ponds is 24 trees per hectare compared to only 0.6 for the CSP footprint. This is related to the fact that the evaporation ponds are located on a rocky slope with a high density of Olea trees as well as several other protected species that were not observed elsewhere. This includes *Pachypodium succulentum* and *Hereroa carinans*. The distribution of the different species at the site is illustrated below.

There are no avoidance options available for the CSP footprint as the site is cleared for construction. Therefore all individuals within the footprint must be translocated or destroyed. The woody species would all need to be destroyed, while some of the succulent and geophyte species would need to be translocated where possible. However, it is important to note that most of the geophytes are only seasonally visible and so they would need to be located during such time. In addition, small species such as *Babiana* may be too numerous to translocate and as this species is not listed or rare, it is not considered to be priority for translocation and this can be done opportunistically, but is not considered a necessary measure for this species. While there are some gerbil burrows and ground squirrels living within the CSP footprint, little can be done about these animals and they will move off naturally during the construction phase of the development. No active burrows of large mammals such as Aardvark were observed and no other avoidance for mammals is considered necessary outside of the standard mitigation and avoidance measures as stipulated in the EMP.

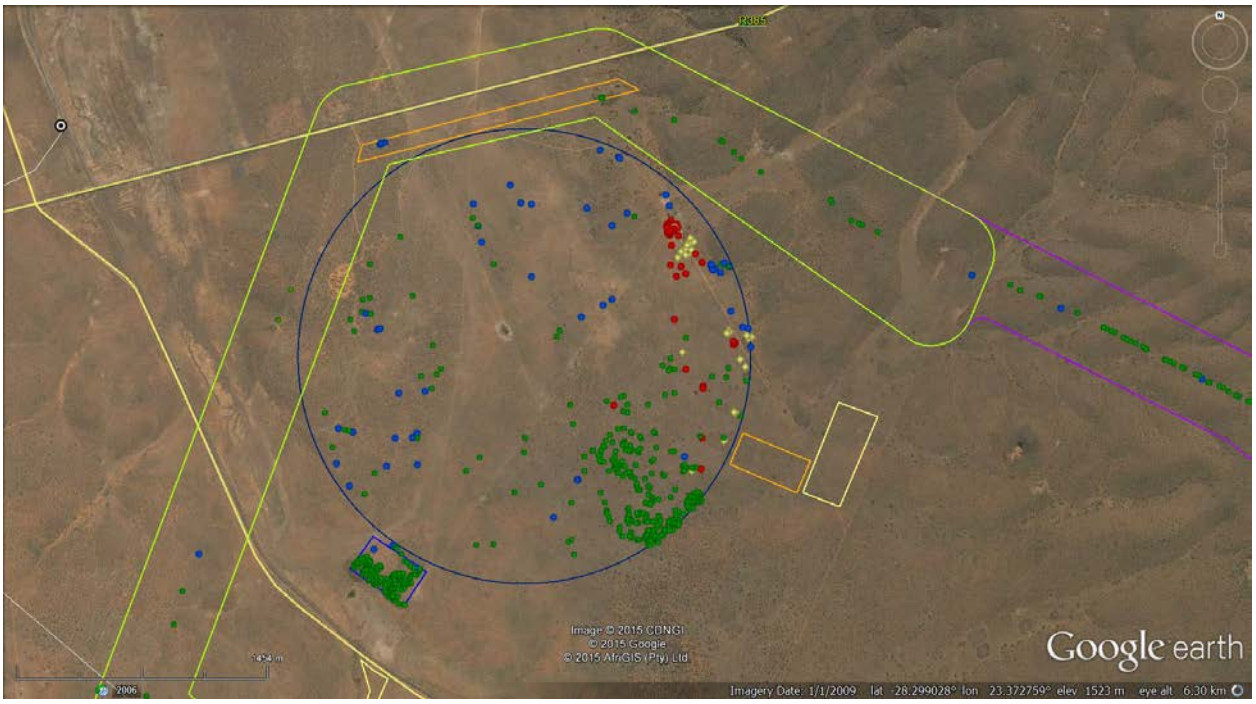

Figure 2. Satellite image showing the location of listed and protected species at the site. *Olea europea* subsp. *africana* is depicted in green; *Acacia erioloba* in red; *Acacia haematoxylon* yellow and all other species in blue. The laydown area and management camps east and south of the site have no observations because these areas are within the cleared areas associated with the existing PV plants at the site.

Table 1. Summary of species of conservation concern that were located within the different parts of the development and the recommended permitting and management action required for each species.

Species	Protection Status	CSP Heliostat Field	Laydown Area 2	Evaporation Ponds	Grand Total	Permit Requirement
Acacia erioloba	DAFF	34	-	-	34	Destroy
Acacia haematoxylon	DAFF	42	-	-	42	Destroy
Acacia tortillis	Not Protected	6	-	-	6	Destroy
Aloe grandidentata	DENC	-	35	-	35	Translocate
Babiana bainesii	DENC	18	-	50	20	Destroy
Boophone disticha	NEMBA	12	-	-	12	Translocate
Boscia foetida subsp. foetida	DENC	-	-	-	0	Destroy
Brunsvigia radulosa	DENC	7	-	-	7	Translocate
Harpagophytum procumbens	NEMBA	1	-	-	1	Translocate
Hereroa carinans	DENC	-	-	1	1	Translocate
Lithops aucampiae subsp. aucampiae	DENC	-	-	-	0	Translocate
Olea europea subsp. africana	DENC	340	2	211	553	Destroy
Pachypodium succulentum	DENC	-	-	1	1	Translocate

Searsia lancea	Not Protected	13	-	-	13	Destroy
Grand Total		**473**	**37**	**262**	**725**	


Typical examples of the vegetation within the Project development footprint, showing an area with a high density of *Tarchonanthus* left, which characterises the southern half of the site, and an open area, right, which characterises the north-western part of the site.


Areas of high protected species density within the Project footprint, showing the population of *Acacia erioloba* left and part of the area within the evaporation ponds left with large *Olea europea* subsp. *africana* trees although most of the *Olea* trees within this area were low shrubby plants and only those on the upper slope were large as pictured.

PERMITTING REQUIREMENTS

In the Northern Cape, environmental permitting is regulated through a central integrated permit office managed by DENC which regulates both national and provincial requirements. As such a single permit application is required for the development. A number of associated documents must accompany the permit application including the following:

- RoD as issued by DEA
- Final full EIA document
- Ecology specialist study from the EIA
- Letter of consent from the landowner
- Walk-through Report (this report)
- Integrated Permit Application Form as issued by DENC and completed with the relevant details and signed by the applicant
- Proof of payment of the Application Fee

In terms of the numbers of protected plants affected, which must be specified on the permit application the numbers indicated in the two tables below should be used. For the power line options, the estimated numbers are those potentially affected by the pylons and it is assumed that the vegetation beneath the power line itself will not be cleared.

Table 3. The following species are protected or listed and must be listed on the permit application for the CSP facility. This is the actual number of individuals as determined during the walk through and for most species is not an estimate.

Species	Protection Status	Affected Individuals	Recommended Action
Acacia erioloba	National - DAFF	34	Destroy
Acacia haematoxylon	National - DAFF	42	Destroy
Aloe grandidentata	Provincial - DENC	35	Translocate
Babiana bainesii	Provincial - DENC	20	Destroy
Boophone disticha	National - NEMBA	12	Translocate
Boscia foetida subsp. foetida	Provincial - DENC	0	Destroy
Brunsvigia radulosa	Provincial - DENC	7	Translocate
Harpagophytum procumbens	National - NEMBA	1	Translocate
Hereroa carinans	Provincial - DENC	1	Translocate
Lithops aucampiae subsp. aucampiae	Provincial - DENC	0	Translocate
Olea europea subsp. africana	Provincial - DENC	553	Destroy
Pachypodium succulentum	Provincial - DENC	1	Translocate

MONITORING & IMPLEMENTATION

The following section describes the roles and responsibilities of the ECO and developer during the different phases of the project that are required to ensure best-practice and protection of plant species of concern. This includes the preconstruction phase of the project, which is largely covered by the current study and associated activities.

Preconstruction

- Identification of all listed species which may occur within the site, based on the SANBI SIBIS database as well as the specialist EIA studies for the site and any other relevant literature.
- A walk-through of the final development footprint by a suitably qualified botanist/ecologist to locate and identify all listed and protected species which fall within the development footprint.
- A walk-through report following the walk-through which contains a full list of localities where listed species occur within the development footprint and the number of affected individuals in each instance, so that this information can be used to comply with the permit conditions required by the authorization as well as provincial requirements.
- Search and rescue operation of all listed species within the development footprint that cannot be avoided. Affected individuals should be translocated to a similar habitat outside of the development footprint and marked for monitoring purposes. Those species suitable for search as rescue should be identified in the walk-through report. It is important to note that a permit is required to translocate or destroy any listed and protected species even if they do not leave the property. Some plants can also be offered to national collections such as the National Botanical Gardens, but no plants should be allowed to go to private collectors unless this is approved by the provincial conservation authorities.

Construction

- ECO to monitor vegetation clearing at the site. Any deviations from the plans that may be required should first be checked for listed species by the ECO and any listed species present which are able to survive translocation should be translocated to a safe site.
- Any listed species observed within the development footprint that were missed during the preconstruction plant sweeps should be translocated to a safe site.
- Many listed species are also sought after for traditional medicine or by collectors and so the ECO should ensure that all staff attend environmental induction training in which the legal and conservation aspects of harvesting plants from the wild are discussed.
- The ECO should monitor construction activities in sensitive habitats such as near rivers and wetlands carefully to ensure that impacts to these areas are minimized.

Operation

- Access to the site should be strictly controlled and all personnel entering or leaving the site should be required to sign and out with the security officers.

- The collecting of plants of their parts should be strictly forbidden and signs stating so should be placed at the entrance gates to the site.

CONCLUSIONS & RECOMMENDATIONS

- Within the CSP facility, around 700 individuals of protected species would be affected by the Project and associated infrastructure. This consists largely of *Olea europea* subsp. *africana* as well as lesser numbers of *Acacia erioloba* and *Acacia haematoxylon*. There may however be additional numbers of small species such as geophytes present which cannot be effectively searched in such large areas. None of these are however of a high conservation concern.
- In terms of the potential to translocate individuals of affected species, none of the affected woody species except for *Olea europea* subsp. *africana* are likely to survive translocation and as a result, this is not a recommended measure for these species.
- Species which can be translocated include *Aloe grandidentata*, *Boophone disticha*, *Brunsvigia radulosa*, *Harpagophytum procumbens*, *Hereroa carinans*, *Lithops aucampiae* subsp. *aucampiae* and *Pachypodium succulentum*. However not all of these species are visible all the time and depending on the timing of the construction process, it may not be possible to find and translocate all individuals of these species prior to construction.

ANNEX 1. LIST OF COORDINATES OF LISTED AND PROTECTED SPECIES WITHIN THE CSP

ID	Species	Count	Within Feature	Latitude	Longitude
1	*Olea europea subsp. africana*	1	CSP Heliostat Field	-28.30648798	23.37690599
2	*Olea europea subsp. africana*	1	CSP Heliostat Field	-28.30644197	23.37694002
3	*Olea europea subsp. africana*	1	CSP Heliostat Field	-28.30645898	23.37702602
4	*Olea europea subsp. africana*	1	CSP Heliostat Field	-28.30641196	23.37708897
5	*Olea europea subsp. africana*	1	CSP Heliostat Field	-28.306405	23.37708796
6	*Olea europea subsp. africana*	1	CSP Heliostat Field	-28.30635002	23.37701001
7	*Olea europea subsp. africana*	1	CSP Heliostat Field	-28.30629998	23.37691697
8	*Olea europea subsp. africana*	1	CSP Heliostat Field	-28.30657801	23.37675604
9	*Olea europea subsp. africana*	1	CSP Heliostat Field	-28.30656501	23.37690298
10	*Olea europea subsp. africana*	1	CSP Heliostat Field	-28.30664297	23.37694799
11	*Olea europea subsp. africana*	1	CSP Heliostat Field	-28.30668001	23.37702502
12	*Olea europea subsp. africana*	1	CSP Heliostat Field	-28.306648	23.37705603
13	*Olea europea subsp. africana*	1	CSP Heliostat Field	-28.30666602	23.377109
14	*Olea europea subsp. africana*	1	CSP Heliostat Field	-28.30679099	23.377181
15	*Olea europea subsp. africana*	1	CSP Heliostat Field	-28.30681203	23.37701504
16	*Olea europea subsp. africana*	1	CSP Heliostat Field	-28.306807	23.37694899
17	*Olea europea subsp. africana*	1	CSP Heliostat Field	-28.306793	23.37688303
18	*Olea europea subsp. africana*	1	CSP Heliostat Field	-28.30668999	23.37689501
19	*Olea europea subsp. africana*	1	CSP Heliostat Field	-28.30661204	23.37671204
20	*Olea europea subsp. africana*	1	CSP Heliostat Field	-28.30660198	23.37658798
21	*Olea europea subsp. africana*	1	CSP Heliostat Field	-28.30652998	23.37652998
22	*Olea europea subsp. africana*	1	CSP Heliostat Field	-28.30650701	23.37649796
23	*Olea europea subsp. africana*	1	CSP Heliostat Field	-28.30662402	23.376404
24	*Olea europea subsp. africana*	1	CSP Heliostat Field	-28.30679703	23.37645102
25	*Olea europea subsp. africana*	1	CSP Heliostat Field	-28.30681798	23.37646301
26	*Olea europea subsp. africana*	1	CSP Heliostat Field	-28.30686299	23.37645999
27	*Olea europea subsp. africana*	1	CSP Heliostat Field	-28.30685796	23.37658304
28	*Olea europea subsp. africana*	1	CSP Heliostat Field	-28.306907	23.37655496
29	*Olea europea subsp. africana*	1	CSP Heliostat Field	-28.30704597	23.37662696
30	*Olea europea subsp. africana*	1	CSP Heliostat Field	-28.30717002	23.37665697
31	*Olea europea subsp. africana*	1	CSP Heliostat Field	-28.30721201	23.376433
32	*Olea europea subsp. africana*	1	CSP Heliostat Field	-28.30710598	23.376346
33	*Olea europea subsp. africana*	1	CSP Heliostat Field	-28.30705804	23.37632798
34	*Olea europea subsp. africana*	1	CSP Heliostat Field	-28.30703599	23.37631599
35	*Olea europea subsp. africana*	1	CSP Heliostat Field	-28.306894	23.37636796
36	*Olea europea subsp. africana*	1	CSP Heliostat Field	-28.30686802	23.37629403
37	*Olea europea subsp. africana*	1	CSP Heliostat Field	-28.30678303	23.37628699
38	*Olea europea subsp. africana*	1	CSP Heliostat Field	-28.30743296	23.37607602

39	*Olea europea subsp. africana*	1	CSP Heliostat Field	-28.30734503	23.37578902
40	*Olea europea subsp. africana*	1	CSP Heliostat Field	-28.30725602	23.37560504
41	*Olea europea subsp. africana*	1	CSP Heliostat Field	-28.30747797	23.37563999
42	*Olea europea subsp. africana*	1	CSP Heliostat Field	-28.30760697	23.37567503
43	*Olea europea subsp. africana*	1	CSP Heliostat Field	-28.307698	23.37579296
44	*Olea europea subsp. africana*	1	CSP Heliostat Field	-28.30772499	23.3758
45	*Olea europea subsp. africana*	1	CSP Heliostat Field	-28.30782901	23.37586203
46	*Olea europea subsp. africana*	1	CSP Heliostat Field	-28.307856	23.37586798
47	*Olea europea subsp. africana*	1	CSP Heliostat Field	-28.30802104	23.37579899
48	*Olea europea subsp. africana*	1	CSP Heliostat Field	-28.30808197	23.37577997
49	*Olea europea subsp. africana*	1	CSP Heliostat Field	-28.30807401	23.37554896
50	*Olea europea subsp. africana*	1	CSP Heliostat Field	-28.30800897	23.37549699
51	*Olea europea subsp. africana*	1	CSP Heliostat Field	-28.30793696	23.37554603
52	*Olea europea subsp. africana*	1	CSP Heliostat Field	-28.307928	23.37558601
53	*Olea europea subsp. africana*	1	CSP Heliostat Field	-28.30773102	23.37536104
54	*Olea europea subsp. africana*	1	CSP Heliostat Field	-28.30782498	23.37527001
55	*Olea europea subsp. africana*	1	CSP Heliostat Field	-28.30786304	23.37521402
56	*Olea europea subsp. africana*	1	CSP Heliostat Field	-28.30794099	23.37524001
57	*Olea europea subsp. africana*	1	CSP Heliostat Field	-28.30799698	23.37518603
58	*Olea europea subsp. africana*	1	CSP Heliostat Field	-28.30828498	23.37546296
59	*Olea europea subsp. africana*	1	CSP Heliostat Field	-28.308317	23.37527596
60	*Olea europea subsp. africana*	1	CSP Heliostat Field	-28.30829504	23.37500297
61	*Olea europea subsp. africana*	1	CSP Heliostat Field	-28.30823896	23.37496902
62	*Olea europea subsp. africana*	1	CSP Heliostat Field	-28.30830099	23.37493298
63	*Olea europea subsp. africana*	1	CSP Heliostat Field	-28.30835103	23.37493901
64	*Olea europea subsp. africana*	1	CSP Heliostat Field	-28.30842496	23.374981
65	*Olea europea subsp. africana*	1	CSP Heliostat Field	-28.30856502	23.37490599
66	*Olea europea subsp. africana*	1	CSP Heliostat Field	-28.30852697	23.37479099
67	*Olea europea subsp. africana*	1	CSP Heliostat Field	-28.30850802	23.37480901
68	*Olea europea subsp. africana*	1	CSP Heliostat Field	-28.30819001	23.37451899
69	*Olea europea subsp. africana*	1	CSP Heliostat Field	-28.30803696	23.37456803
70	*Olea europea subsp. africana*	1	CSP Heliostat Field	-28.30801399	23.37457004
71	*Olea europea subsp. africana*	1	CSP Heliostat Field	-28.308001	23.37468596
72	*Olea europea subsp. africana*	1	CSP Heliostat Field	-28.307799	23.374735
73	*Olea europea subsp. africana*	1	CSP Heliostat Field	-28.30758601	23.37466501
74	*Olea europea subsp. africana*	1	CSP Heliostat Field	-28.30754503	23.37458496
75	*Olea europea subsp. africana*	1	CSP Heliostat Field	-28.30657097	23.37533698
76	*Olea europea subsp. africana*	1	CSP Heliostat Field	-28.306189	23.37560504
77	*Olea europea subsp. africana*	1	CSP Heliostat Field	-28.30545902	23.37496097
78	*Olea europea subsp. africana*	1	CSP Heliostat Field	-28.30538702	23.37484698
79	*Olea europea subsp. africana*	1	CSP Heliostat Field	-28.30471303	23.37419797
80	*Olea europea subsp. africana*	1	CSP Heliostat Field	-28.30461002	23.37429897
81	*Olea europea subsp. africana*	1	CSP Heliostat Field	-28.30400099	23.374477
82	*Olea europea subsp. africana*	1	CSP Heliostat Field	-28.30351903	23.37359296
83	*Olea europea subsp. africana*	1	CSP Heliostat Field	-28.30341702	23.37351099

84	*Olea europea subsp. africana*	1	CSP Heliostat Field	-28.30297002	23.37256098
85	*Olea europea subsp. africana*	1	CSP Heliostat Field	-28.30320102	23.37298896
86	*Olea europea subsp. africana*	1	CSP Heliostat Field	-28.30322801	23.37302903
87	*Olea europea subsp. africana*	1	CSP Heliostat Field	-28.30386696	23.37292601
88	*Olea europea subsp. africana*	1	CSP Heliostat Field	-28.30408498	23.372995
89	*Olea europea subsp. africana*	1	CSP Heliostat Field	-28.30415103	23.37286399
90	*Olea europea subsp. africana*	1	CSP Heliostat Field	-28.30402203	23.37352599
91	*Olea europea subsp. africana*	1	CSP Heliostat Field	-28.304146	23.373384
92	*Olea europea subsp. africana*	1	CSP Heliostat Field	-28.304175	23.37343597
93	*Olea europea subsp. africana*	1	CSP Heliostat Field	-28.30427399	23.37342499
94	*Olea europea subsp. africana*	1	CSP Heliostat Field	-28.30489702	23.373255
95	*Olea europea subsp. africana*	1	CSP Heliostat Field	-28.30534201	23.37421297
96	*Olea europea subsp. africana*	1	CSP Heliostat Field	-28.305613	23.37381097
97	*Olea europea subsp. africana*	1	CSP Heliostat Field	-28.306002	23.37401298
98	*Olea europea subsp. africana*	1	CSP Heliostat Field	-28.306074	23.374089
99	*Olea europea subsp. africana*	1	CSP Heliostat Field	-28.30608096	23.37408397
100	*Olea europea subsp. africana*	1	CSP Heliostat Field	-28.30643501	23.37401901
101	*Olea europea subsp. africana*	1	CSP Heliostat Field	-28.30648203	23.37406302
102	*Olea europea subsp. africana*	1	CSP Heliostat Field	-28.30657801	23.37419897
103	*Olea europea subsp. africana*	1	CSP Heliostat Field	-28.30658798	23.37423803
104	*Olea europea subsp. africana*	1	CSP Heliostat Field	-28.306648	23.37426997
105	*Olea europea subsp. africana*	1	CSP Heliostat Field	-28.30670399	23.37461002
106	*Olea europea subsp. africana*	1	CSP Heliostat Field	-28.30679602	23.37424901
107	*Olea europea subsp. africana*	1	CSP Heliostat Field	-28.30681999	23.37421498
108	*Olea europea subsp. africana*	1	CSP Heliostat Field	-28.30692401	23.37412203
109	*Olea europea subsp. africana*	1	CSP Heliostat Field	-28.30697296	23.374118
110	*Olea europea subsp. africana*	1	CSP Heliostat Field	-28.30784502	23.37425798
111	*Olea europea subsp. africana*	1	CSP Heliostat Field	-28.30783303	23.374318
112	*Olea europea subsp. africana*	1	CSP Heliostat Field	-28.30786002	23.37436996
113	*Olea europea subsp. africana*	1	CSP Heliostat Field	-28.307886	23.37440198
114	*Olea europea subsp. africana*	1	CSP Heliostat Field	-28.30825397	23.374348
115	*Olea europea subsp. africana*	1	CSP Heliostat Field	-28.30832404	23.37435597
116	*Olea europea subsp. africana*	1	CSP Heliostat Field	-28.30833502	23.37433903
117	*Olea europea subsp. africana*	1	CSP Heliostat Field	-28.30832496	23.37431003
118	*Olea europea subsp. africana*	1	CSP Heliostat Field	-28.30829697	23.37429796
119	*Olea europea subsp. africana*	1	CSP Heliostat Field	-28.30786304	23.37397702
120	*Olea europea subsp. africana*	1	CSP Heliostat Field	-28.307842	23.37398599
121	*Olea europea subsp. africana*	1	CSP Heliostat Field	-28.30779598	23.37388901
122	*Olea europea subsp. africana*	1	CSP Heliostat Field	-28.30784602	23.37381802
123	*Olea europea subsp. africana*	1	CSP Heliostat Field	-28.30763899	23.37382103
124	*Olea europea subsp. africana*	1	CSP Heliostat Field	-28.30751804	23.37390997
125	*Olea europea subsp. africana*	1	CSP Heliostat Field	-28.30749499	23.37389404
126	*Olea europea subsp. africana*	1	CSP Heliostat Field	-28.30744796	23.37377996
127	*Olea europea subsp. africana*	1	CSP Heliostat Field	-28.30743497	23.37369103
128	*Olea europea subsp. africana*	1	CSP Heliostat Field	-28.30741402	23.37366899

129	*Olea europea subsp. africana*	1	CSP Heliostat Field	-28.30738803	23.37361802
130	*Olea europea subsp. africana*	1	CSP Heliostat Field	-28.307353	23.37353404
131	*Olea europea subsp. africana*	1	CSP Heliostat Field	-28.30742299	23.37345298
132	*Olea europea subsp. africana*	1	CSP Heliostat Field	-28.30745098	23.37343496
133	*Olea europea subsp. africana*	1	CSP Heliostat Field	-28.30755098	23.37337998
134	*Olea europea subsp. africana*	1	CSP Heliostat Field	-28.30739499	23.37332097
135	*Olea europea subsp. africana*	1	CSP Heliostat Field	-28.30690096	23.37386403
136	*Olea europea subsp. africana*	1	CSP Heliostat Field	-28.30683298	23.37383796
137	*Olea europea subsp. africana*	1	CSP Heliostat Field	-28.30620099	23.37350604
138	*Olea europea subsp. africana*	1	CSP Heliostat Field	-28.30622002	23.37346899
139	*Olea europea subsp. africana*	1	CSP Heliostat Field	-28.30619797	23.37337403
140	*Olea europea subsp. africana*	1	CSP Heliostat Field	-28.305988	23.37330203
141	*Olea europea subsp. africana*	1	CSP Heliostat Field	-28.305959	23.37331401
142	*Olea europea subsp. africana*	1	CSP Heliostat Field	-28.30589497	23.37333103
143	*Olea europea subsp. africana*	1	CSP Heliostat Field	-28.30560696	23.37320496
144	*Olea europea subsp. africana*	1	CSP Heliostat Field	-28.30552599	23.37300497
145	*Olea europea subsp. africana*	1	CSP Heliostat Field	-28.30543597	23.37296298
146	*Olea europea subsp. africana*	1	CSP Heliostat Field	-28.30536699	23.372923
147	*Olea europea subsp. africana*	1	CSP Heliostat Field	-28.30533204	23.37291797
148	*Olea europea subsp. africana*	1	CSP Heliostat Field	-28.30527001	23.37295099
149	*Olea europea subsp. africana*	1	CSP Heliostat Field	-28.30420299	23.37289601
150	*Olea europea subsp. africana*	1	CSP Heliostat Field	-28.30416603	23.37299198
151	*Olea europea subsp. africana*	1	CSP Heliostat Field	-28.304074	23.37270901
152	*Olea europea subsp. africana*	1	CSP Heliostat Field	-28.30411297	23.37266098
153	*Olea europea subsp. africana*	1	CSP Heliostat Field	-28.30386998	23.37249502
154	*Olea europea subsp. africana*	1	CSP Heliostat Field	-28.303844	23.37249803
155	*Olea europea subsp. africana*	1	CSP Heliostat Field	-28.30373403	23.37251396
156	*Olea europea subsp. africana*	1	CSP Heliostat Field	-28.30368399	23.37259501
157	*Olea europea subsp. africana*	1	CSP Heliostat Field	-28.30301997	23.372219
158	*Olea europea subsp. africana*	1	CSP Heliostat Field	-28.30176302	23.369371
159	*Olea europea subsp. africana*	1	CSP Heliostat Field	-28.30276198	23.36955397
160	*Olea europea subsp. africana*	1	CSP Heliostat Field	-28.30417701	23.37068796
161	*Olea europea subsp. africana*	1	CSP Heliostat Field	-28.30412203	23.370737
162	*Olea europea subsp. africana*	1	CSP Heliostat Field	-28.30411901	23.371212
163	*Olea europea subsp. africana*	1	CSP Heliostat Field	-28.30389798	23.37133898
164	*Olea europea subsp. africana*	1	CSP Heliostat Field	-28.30396403	23.37143403
165	*Olea europea subsp. africana*	1	CSP Heliostat Field	-28.30362003	23.371485
166	*Olea europea subsp. africana*	1	CSP Heliostat Field	-28.30332398	23.37172103
167	*Olea europea subsp. africana*	1	CSP Heliostat Field	-28.30370896	23.371874
168	*Olea europea subsp. africana*	1	CSP Heliostat Field	-28.30419503	23.37206603
169	*Olea europea subsp. africana*	1	CSP Heliostat Field	-28.30448404	23.37202496
170	*Olea europea subsp. africana*	1	CSP Heliostat Field	-28.304635	23.37186797
171	*Olea europea subsp. africana*	1	CSP Heliostat Field	-28.30474396	23.37195497
172	*Olea europea subsp. africana*	1	CSP Heliostat Field	-28.304808	23.37210702
173	*Olea europea subsp. africana*	1	CSP Heliostat Field	-28.30487497	23.37209696

174	*Olea europea subsp. africana*	1	CSP Heliostat Field	-28.30490104	23.37207902
175	*Olea europea subsp. africana*	1	CSP Heliostat Field	-28.30507404	23.37198397
176	*Olea europea subsp. africana*	1	CSP Heliostat Field	-28.30500799	23.37215303
177	*Olea europea subsp. africana*	1	CSP Heliostat Field	-28.30508804	23.37220701
178	*Olea europea subsp. africana*	1	CSP Heliostat Field	-28.30519298	23.37211498
179	*Olea europea subsp. africana*	1	CSP Heliostat Field	-28.30532399	23.37220198
180	*Olea europea subsp. africana*	1	CSP Heliostat Field	-28.30491998	23.372319
181	*Olea europea subsp. africana*	1	CSP Heliostat Field	-28.304707	23.37244598
182	*Olea europea subsp. africana*	1	CSP Heliostat Field	-28.30496198	23.37261404
183	*Olea europea subsp. africana*	1	CSP Heliostat Field	-28.30524302	23.37285301
184	*Olea europea subsp. africana*	1	CSP Heliostat Field	-28.30527596	23.37289098
185	*Olea europea subsp. africana*	1	CSP Heliostat Field	-28.30533396	23.37265201
186	*Olea europea subsp. africana*	1	CSP Heliostat Field	-28.30548199	23.37248999
187	*Olea europea subsp. africana*	1	CSP Heliostat Field	-28.30712501	23.37284203
188	*Olea europea subsp. africana*	1	CSP Heliostat Field	-28.30718704	23.37279199
189	*Olea europea subsp. africana*	1	CSP Heliostat Field	-28.30744897	23.37287103
190	*Olea europea subsp. africana*	1	CSP Heliostat Field	-28.30747596	23.372838
191	*Olea europea subsp. africana*	1	CSP Heliostat Field	-28.30751996	23.37282702
192	*Olea europea subsp. africana*	1	CSP Heliostat Field	-28.30770596	23.37275301
193	*Olea europea subsp. africana*	1	CSP Heliostat Field	-28.30774804	23.37277899
194	*Olea europea subsp. africana*	1	CSP Heliostat Field	-28.30778399	23.37276801
195	*Olea europea subsp. africana*	1	CSP Heliostat Field	-28.30777	23.37284404
196	*Olea europea subsp. africana*	1	CSP Heliostat Field	-28.307799	23.37290397
197	*Olea europea subsp. africana*	1	CSP Heliostat Field	-28.30773404	23.37297698
198	*Olea europea subsp. africana*	1	CSP Heliostat Field	-28.30776203	23.37298804
199	*Olea europea subsp. africana*	1	CSP Heliostat Field	-28.30778701	23.37298502
200	*Olea europea subsp. africana*	1	CSP Heliostat Field	-28.30780503	23.37297999
201	*Olea europea subsp. africana*	1	CSP Heliostat Field	-28.30783102	23.37296197
202	*Olea europea subsp. africana*	1	CSP Heliostat Field	-28.30786304	23.37292702
203	*Olea europea subsp. africana*	1	CSP Heliostat Field	-28.307958	23.37284303
204	*Olea europea subsp. africana*	1	CSP Heliostat Field	-28.30792397	23.37327001
205	*Olea europea subsp. africana*	1	CSP Heliostat Field	-28.30792297	23.37335198
206	*Olea europea subsp. africana*	1	CSP Heliostat Field	-28.30792699	23.37342499
207	*Olea europea subsp. africana*	1	CSP Heliostat Field	-28.30828599	23.37401499
208	*Olea europea subsp. africana*	1	CSP Heliostat Field	-28.308302	23.37400904
209	*Olea europea subsp. africana*	1	CSP Heliostat Field	-28.30836897	23.37397601
210	*Olea europea subsp. africana*	1	CSP Heliostat Field	-28.30838196	23.374002
211	*Olea europea subsp. africana*	1	CSP Heliostat Field	-28.30852898	23.373974
212	*Olea europea subsp. africana*	1	CSP Heliostat Field	-28.30850903	23.37393201
213	*Olea europea subsp. africana*	1	CSP Heliostat Field	-28.30854096	23.37386504
214	*Olea europea subsp. africana*	1	CSP Heliostat Field	-28.30861598	23.37386596
215	*Olea europea subsp. africana*	1	CSP Heliostat Field	-28.30865999	23.37381701
216	*Olea europea subsp. africana*	1	CSP Heliostat Field	-28.30875202	23.37375398
217	*Olea europea subsp. africana*	1	CSP Heliostat Field	-28.30902301	23.37396503
218	*Olea europea subsp. africana*	1	CSP Heliostat Field	-28.30894397	23.37400904

219	*Olea europea subsp. africana*	1	CSP Heliostat Field	-28.30881799	23.37415799
220	*Olea europea subsp. africana*	1	CSP Heliostat Field	-28.30873199	23.37421901
221	*Olea europea subsp. africana*	1	CSP Heliostat Field	-28.30867399	23.37430299
222	*Olea europea subsp. africana*	1	CSP Heliostat Field	-28.30866502	23.374348
223	*Olea europea subsp. africana*	1	CSP Heliostat Field	-28.30858799	23.37439301
224	*Olea europea subsp. africana*	1	CSP Heliostat Field	-28.30860299	23.37442302
225	*Olea europea subsp. africana*	1	CSP Heliostat Field	-28.30862403	23.37464003
226	*Olea europea subsp. africana*	1	CSP Heliostat Field	-28.30861397	23.37472997
227	*Olea europea subsp. africana*	1	CSP Heliostat Field	-28.30891899	23.37460801
228	*Olea europea subsp. africana*	1	CSP Heliostat Field	-28.30896903	23.37429503
229	*Olea europea subsp. africana*	1	CSP Heliostat Field	-28.30909199	23.37410501
230	*Olea europea subsp. africana*	1	CSP Heliostat Field	-28.308777	23.37343798
231	*Olea europea subsp. africana*	1	CSP Heliostat Field	-28.30878002	23.37339599
232	*Olea europea subsp. africana*	1	CSP Heliostat Field	-28.30878798	23.37336296
233	*Olea europea subsp. africana*	1	CSP Heliostat Field	-28.308691	23.37302702
234	*Olea europea subsp. africana*	1	CSP Heliostat Field	-28.30869402	23.372966
235	*Olea europea subsp. africana*	1	CSP Heliostat Field	-28.30862302	23.37290003
236	*Olea europea subsp. africana*	1	CSP Heliostat Field	-28.30858698	23.37293297
237	*Olea europea subsp. africana*	1	CSP Heliostat Field	-28.30856603	23.37291202
238	*Olea europea subsp. africana*	1	CSP Heliostat Field	-28.30840099	23.37298402
239	*Olea europea subsp. africana*	1	CSP Heliostat Field	-28.30862403	23.37249502
240	*Olea europea subsp. africana*	1	CSP Heliostat Field	-28.30860701	23.37244104
241	*Olea europea subsp. africana*	1	CSP Heliostat Field	-28.30835396	23.37229804
242	*Olea europea subsp. africana*	1	CSP Heliostat Field	-28.30813997	23.37231204
243	*Olea europea subsp. africana*	1	CSP Heliostat Field	-28.30784502	23.37172296
244	*Olea europea subsp. africana*	1	CSP Heliostat Field	-28.30762197	23.37167803
245	*Olea europea subsp. africana*	1	CSP Heliostat Field	-28.30742399	23.37154903
246	*Olea europea subsp. africana*	1	CSP Heliostat Field	-28.30734797	23.37152598
247	*Olea europea subsp. africana*	1	CSP Heliostat Field	-28.30724998	23.37154501
248	*Olea europea subsp. africana*	1	CSP Heliostat Field	-28.30684204	23.371428
249	*Olea europea subsp. africana*	1	CSP Heliostat Field	-28.306347	23.371184
250	*Olea europea subsp. africana*	1	CSP Heliostat Field	-28.30520203	23.371658
251	*Olea europea subsp. africana*	1	CSP Heliostat Field	-28.30472703	23.37135701
252	*Olea europea subsp. africana*	1	CSP Heliostat Field	-28.30473902	23.37117503
253	*Olea europea subsp. africana*	1	CSP Heliostat Field	-28.30465201	23.37111896
254	*Olea europea subsp. africana*	1	CSP Heliostat Field	-28.30439603	23.37103799
255	*Olea europea subsp. africana*	1	CSP Heliostat Field	-28.30437298	23.37119498
256	*Olea europea subsp. africana*	1	CSP Heliostat Field	-28.30445797	23.37020902
257	*Olea europea subsp. africana*	1	CSP Heliostat Field	-28.30520203	23.37021497
258	*Olea europea subsp. africana*	1	CSP Heliostat Field	-28.30685503	23.36944601
259	*Olea europea subsp. africana*	1	CSP Heliostat Field	-28.30878798	23.36943897
260	*Olea europea subsp. africana*	1	CSP Heliostat Field	-28.30891002	23.36927704
261	*Olea europea subsp. africana*	1	CSP Heliostat Field	-28.30957797	23.36960603
262	*Olea europea subsp. africana*	1	CSP Heliostat Field	-28.30592003	23.36763804
263	*Olea europea subsp. africana*	1	CSP Heliostat Field	-28.30347301	23.36669298

264	*Olea europea subsp. africana*	1	CSP Heliostat Field	-28.30425798	23.36663104
265	*Olea europea subsp. africana*	1	CSP Heliostat Field	-28.30632504	23.36607398
266	*Olea europea subsp. africana*	1	CSP Heliostat Field	-28.30902603	23.36481703
267	*Olea europea subsp. africana*	1	CSP Heliostat Field	-28.30905603	23.363792
268	*Olea europea subsp. africana*	1	CSP Heliostat Field	-28.30519801	23.36320996
269	*Olea europea subsp. africana*	1	CSP Heliostat Field	-28.30450399	23.36400901
270	*Olea europea subsp. africana*	1	CSP Heliostat Field	-28.30923297	23.35909403
271	*Acacia erioloba*	1	CSP Heliostat Field	-28.29863397	23.37907498
272	*Acacia erioloba*	1	CSP Heliostat Field	-28.29233296	23.37565097
273	*Acacia erioloba*	1	CSP Heliostat Field	-28.29233103	23.37517496
274	*Acacia erioloba*	1	CSP Heliostat Field	-28.29251803	23.37575901
275	*Acacia erioloba*	1	CSP Heliostat Field	-28.29281802	23.37533397
276	*Acacia erioloba*	1	CSP Heliostat Field	-28.29286303	23.37523196
277	*Acacia erioloba*	1	CSP Heliostat Field	-28.292914	23.37527303
278	*Acacia erioloba*	1	CSP Heliostat Field	-28.29293302	23.37579204
279	*Acacia erioloba*	1	CSP Heliostat Field	-28.29344197	23.37538702
280	*Acacia erioloba*	1	CSP Heliostat Field	-28.29389703	23.37679502
281	*Acacia erioloba*	1	CSP Heliostat Field	-28.29433397	23.37720296
282	*Acacia erioloba*	1	CSP Heliostat Field	-28.29492096	23.37622496
283	*Acacia erioloba*	1	CSP Heliostat Field	-28.29506102	23.37567503
284	*Acacia erioloba*	1	CSP Heliostat Field	-28.29455299	23.37595096
285	*Acacia erioloba*	1	CSP Heliostat Field	-28.29238996	23.37509399
286	*Acacia erioloba*	1	CSP Heliostat Field	-28.29447404	23.37532399
287	*Acacia erioloba*	1	CSP Heliostat Field	-28.29852501	23.37916902
288	*Acacia erioloba*	1	CSP Heliostat Field	-28.298494	23.37908101
289	*Acacia erioloba*	1	CSP Heliostat Field	-28.29846298	23.37904598
290	*Acacia erioloba*	1	CSP Heliostat Field	-28.30076298	23.37726298
291	*Acacia erioloba*	1	CSP Heliostat Field	-28.30091	23.37724596
292	*Acacia erioloba*	1	CSP Heliostat Field	-28.30349296	23.37719701
293	*Acacia erioloba*	1	CSP Heliostat Field	-28.30510497	23.37714002
294	*Acacia erioloba*	1	CSP Heliostat Field	-28.29990098	23.37623804
295	*Acacia erioloba*	1	CSP Heliostat Field	-28.297316	23.37555299
296	*Acacia erioloba*	1	CSP Heliostat Field	-28.30178498	23.37195396
297	*Acacia erioloba*	1	CSP Heliostat Field	-28.29213498	23.37533698
298	*Acacia erioloba*	1	CSP Heliostat Field	-28.29250203	23.37511
299	*Acacia erioloba*	1	CSP Heliostat Field	-28.29273496	23.37514697
300	*Acacia erioloba*	1	CSP Heliostat Field	-28.29281299	23.37517002
301	*Acacia erioloba*	1	CSP Heliostat Field	-28.29269397	23.37529399
302	*Acacia erioloba*	1	CSP Heliostat Field	-28.292714	23.37539599
303	*Acacia erioloba*	1	CSP Heliostat Field	-28.292642	23.37553899
304	*Acacia erioloba*	1	CSP Heliostat Field	-28.29258501	23.37554804
305	*Acacia haematoxylon*	1	CSP Heliostat Field	-28.29248602	23.37555097
306	*Acacia haematoxylon*	1	CSP Heliostat Field	-28.29306797	23.37649302
307	*Acacia haematoxylon*	1	CSP Heliostat Field	-28.29393902	23.37620602
308	*Acacia haematoxylon*	1	CSP Heliostat Field	-28.29392402	23.376332

309	*Acacia haematoxylon*	1	CSP Heliostat Field	-28.29391597	23.37634801
310	*Acacia haematoxylon*	1	CSP Heliostat Field	-28.29390599	23.37638799
311	*Acacia haematoxylon*	1	CSP Heliostat Field	-28.29356401	23.37649
312	*Acacia haematoxylon*	1	CSP Heliostat Field	-28.29358002	23.37650903
313	*Acacia haematoxylon*	1	CSP Heliostat Field	-28.29358497	23.37647902
314	*Acacia haematoxylon*	1	CSP Heliostat Field	-28.293633	23.37649704
315	*Acacia haematoxylon*	1	CSP Heliostat Field	-28.29367197	23.376547
316	*Acacia haematoxylon*	1	CSP Heliostat Field	-28.29370902	23.37651196
317	*Acacia haematoxylon*	1	CSP Heliostat Field	-28.29325103	23.37670298
318	*Acacia haematoxylon*	1	CSP Heliostat Field	-28.29381497	23.37661296
319	*Acacia haematoxylon*	1	CSP Heliostat Field	-28.29442299	23.375296
320	*Acacia haematoxylon*	1	CSP Heliostat Field	-28.29813902	23.37983597
321	*Acacia haematoxylon*	1	CSP Heliostat Field	-28.29818998	23.37989699
322	*Acacia haematoxylon*	1	CSP Heliostat Field	-28.29828403	23.37994603
323	*Acacia haematoxylon*	1	CSP Heliostat Field	-28.29825201	23.38012196
324	*Acacia haematoxylon*	1	CSP Heliostat Field	-28.29821404	23.38012498
325	*Acacia haematoxylon*	1	CSP Heliostat Field	-28.29937996	23.37944697
326	*Acacia haematoxylon*	1	CSP Heliostat Field	-28.29794599	23.37882796
327	*Acacia haematoxylon*	1	CSP Heliostat Field	-28.297933	23.37881103
328	*Acacia haematoxylon*	1	CSP Heliostat Field	-28.29331499	23.37642202
329	*Acacia haematoxylon*	1	CSP Heliostat Field	-28.29788396	23.37874599
330	*Acacia haematoxylon*	1	CSP Heliostat Field	-28.29802101	23.37865697
331	*Acacia haematoxylon*	1	CSP Heliostat Field	-28.297991	23.37872797
332	*Acacia haematoxylon*	1	CSP Heliostat Field	-28.297991	23.37878304
333	*Acacia haematoxylon*	1	CSP Heliostat Field	-28.29804699	23.37875102
334	*Acacia haematoxylon*	1	CSP Heliostat Field	-28.29977701	23.37974796
335	*Acacia haematoxylon*	1	CSP Heliostat Field	-28.30212101	23.37908898
336	*Acacia haematoxylon*	1	CSP Heliostat Field	-28.30216996	23.37913399
337	*Acacia haematoxylon*	1	CSP Heliostat Field	-28.30217399	23.37916802
338	*Acacia haematoxylon*	1	CSP Heliostat Field	-28.30363403	23.378489
339	*Acacia haematoxylon*	1	CSP Heliostat Field	-28.29334198	23.37642596
340	*Acacia haematoxylon*	1	CSP Heliostat Field	-28.30519198	23.37660399
341	*Acacia haematoxylon*	1	CSP Heliostat Field	-28.29900102	23.37601399
342	*Acacia haematoxylon*	1	CSP Heliostat Field	-28.29342898	23.37631096
343	*Acacia haematoxylon*	1	CSP Heliostat Field	-28.29340098	23.37626201
344	*Acacia haematoxylon*	1	CSP Heliostat Field	-28.29359896	23.37620803
345	*Acacia haematoxylon*	1	CSP Heliostat Field	-28.29376602	23.37593897
346	*Acacia haematoxylon*	1	CSP Heliostat Field	-28.29407296	23.37574099
347	*Acacia tortillis*	6	CSP Heliostat Field	-28.29175796	23.37274798
348	*Babiana bainesii*	1	CSP Heliostat Field	-28.29435602	23.378518
349	*Babiana bainesii*	1	CSP Heliostat Field	-28.29453003	23.37879896
350	*Babiana bainesii*	1	CSP Heliostat Field	-28.29486304	23.37828096
351	*Babiana bainesii*	1	CSP Heliostat Field	-28.29242902	23.36391698
352	*Babiana bainesii*	1	CSP Heliostat Field	-28.29327702	23.364122
353	*Babiana bainesii*	1	CSP Heliostat Field	-28.30482703	23.35551504

354	*Babiana bainesii*	1	CSP Heliostat Field	-28.30599798	23.35627796
355	*Babiana bainesii*	1	CSP Heliostat Field	-28.30494697	23.35848399
356	*Babiana bainesii*	1	CSP Heliostat Field	-28.30488	23.36030697
357	*Babiana bainesii*	1	CSP Heliostat Field	-28.30908797	23.35886403
358	*Babiana bainesii*	1	CSP Heliostat Field	-28.29700503	23.35725596
359	*Babiana bainesii*	1	CSP Heliostat Field	-28.29784901	23.35793297
360	*Babiana bainesii*	1	CSP Heliostat Field	-28.30104796	23.36076404
361	*Babiana bainesii*	1	CSP Heliostat Field	-28.30115701	23.35920501
362	*Babiana bainesii*	1	CSP Heliostat Field	-28.30298401	23.35562602
363	*Babiana bainesii*	1	CSP Heliostat Field	-28.30317998	23.35647703
364	*Babiana bainesii*	1	CSP Heliostat Field	-28.30323698	23.36028803
365	*Babiana bainesii*	1	CSP Heliostat Field	-28.30346698	23.36001604
366	*Boophone disticha*	1	CSP Heliostat Field	-28.29687	23.37889703
367	*Boophone disticha*	1	CSP Heliostat Field	-28.29626299	23.37185003
368	*Boophone disticha*	1	CSP Heliostat Field	-28.28891801	23.37230802
369	*Boophone disticha*	1	CSP Heliostat Field	-28.29718097	23.37003401
370	*Boophone disticha*	1	CSP Heliostat Field	-28.28883201	23.37224004
371	*Boophone disticha*	1	CSP Heliostat Field	-28.29129201	23.36707796
372	*Boophone disticha*	1	CSP Heliostat Field	-28.29122898	23.36644898
373	*Boophone disticha*	1	CSP Heliostat Field	-28.29030597	23.36581699
374	*Boophone disticha*	1	CSP Heliostat Field	-28.29127399	23.363634
375	*Boophone disticha*	1	CSP Heliostat Field	-28.29779704	23.35808401
376	*Boophone disticha*	1	CSP Heliostat Field	-28.291506	23.37036501
377	*Boophone disticha*	1	CSP Heliostat Field	-28.30567603	23.36979303
378	*Brunsvigia radulosa*	1	CSP Heliostat Field	-28.28846497	23.37114997
379	*Brunsvigia radulosa*	1	CSP Heliostat Field	-28.30763304	23.36838897
380	*Brunsvigia radulosa*	1	CSP Heliostat Field	-28.29655903	23.37132499
381	*Brunsvigia radulosa*	1	CSP Heliostat Field	-28.30349397	23.35898699
382	*Brunsvigia radulosa*	1	CSP Heliostat Field	-28.29506898	23.36707704
383	*Brunsvigia radulosa*	1	CSP Heliostat Field	-28.30566597	23.36983896
384	*Brunsvigia radulosa*	1	CSP Heliostat Field	-28.30446904	23.37615497
385	*Harpagophytum procumbens*	1	CSP Heliostat Field	-28.29241502	23.37185497
386	*Olea europea subsp. africana*	1	CSP Heliostat Field	-28.29194304	23.37317999
387	*Olea europea subsp. africana*	1	CSP Heliostat Field	-28.30518401	23.37614701
388	*Olea europea subsp. africana*	1	CSP Heliostat Field	-28.29441	23.37833703
389	*Olea europea subsp. africana*	1	CSP Heliostat Field	-28.29446297	23.37846301
390	*Olea europea subsp. africana*	1	CSP Heliostat Field	-28.30340403	23.37707397
391	*Olea europea subsp. africana*	1	CSP Heliostat Field	-28.297919	23.35655197
392	*Olea europea subsp. africana*	1	CSP Heliostat Field	-28.30501897	23.37682704
393	*Olea europea subsp. africana*	1	CSP Heliostat Field	-28.29240999	23.36390499
394	*Olea europea subsp. africana*	1	CSP Heliostat Field	-28.29778003	23.35813497
395	*Olea europea subsp. africana*	1	CSP Heliostat Field	-28.30503901	23.37661296
396	*Olea europea subsp. africana*	1	CSP Heliostat Field	-28.29606903	23.36003498
397	*Olea europea subsp. africana*	1	CSP Heliostat Field	-28.30509399	23.376677
398	*Olea europea subsp. africana*	1	CSP Heliostat Field	-28.29865803	23.36122496

399	*Olea europea subsp. africana*	1	CSP Heliostat Field	-28.30114896	23.37556204
400	*Olea europea subsp. africana*	1	CSP Heliostat Field	-28.30025503	23.36053404
401	*Olea europea subsp. africana*	1	CSP Heliostat Field	-28.30124301	23.37500498
402	*Olea europea subsp. africana*	1	CSP Heliostat Field	-28.30015797	23.36146099
403	*Olea europea subsp. africana*	1	CSP Heliostat Field	-28.29997298	23.37520598
404	*Olea europea subsp. africana*	1	CSP Heliostat Field	-28.29988204	23.36172201
405	*Olea europea subsp. africana*	1	CSP Heliostat Field	-28.29986997	23.37529499
406	*Olea europea subsp. africana*	1	CSP Heliostat Field	-28.30091704	23.36115698
407	*Olea europea subsp. africana*	1	CSP Heliostat Field	-28.29990098	23.37557
408	*Olea europea subsp. africana*	1	CSP Heliostat Field	-28.30218002	23.35482102
409	*Olea europea subsp. africana*	1	CSP Heliostat Field	-28.29933403	23.37531997
410	*Olea europea subsp. africana*	1	CSP Heliostat Field	-28.30306901	23.35600404
411	*Olea europea subsp. africana*	1	CSP Heliostat Field	-28.29452801	23.37873098
412	*Olea europea subsp. africana*	1	CSP Heliostat Field	-28.299717	23.374851
413	*Olea europea subsp. africana*	1	CSP Heliostat Field	-28.30310899	23.356241
414	*Olea europea subsp. africana*	1	CSP Heliostat Field	-28.29824899	23.37624701
415	*Olea europea subsp. africana*	1	CSP Heliostat Field	-28.29443196	23.364841
416	*Olea europea subsp. africana*	1	CSP Heliostat Field	-28.30348098	23.360325
417	*Olea europea subsp. africana*	1	CSP Heliostat Field	-28.29788396	23.36874696
418	*Olea europea subsp. africana*	1	CSP Heliostat Field	-28.30397802	23.35526702
419	*Olea europea subsp. africana*	1	CSP Heliostat Field	-28.29819904	23.36857103
420	*Olea europea subsp. africana*	1	CSP Heliostat Field	-28.30641297	23.35717399
421	*Olea europea subsp. africana*	1	CSP Heliostat Field	-28.30156404	23.37153504
422	*Olea europea subsp. africana*	1	CSP Heliostat Field	-28.30532801	23.35777799
423	*Olea europea subsp. africana*	1	CSP Heliostat Field	-28.30208698	23.37252301
424	*Olea europea subsp. africana*	1	CSP Heliostat Field	-28.30214599	23.37274698
425	*Olea europea subsp. africana*	1	CSP Heliostat Field	-28.30214096	23.37278503
426	*Olea europea subsp. africana*	1	CSP Heliostat Field	-28.30176101	23.37278101
427	*Olea europea subsp. africana*	1	CSP Heliostat Field	-28.30134099	23.37239401
428	*Olea europea subsp. africana*	1	CSP Heliostat Field	-28.30051202	23.37982499
429	*Olea europea subsp. africana*	1	CSP Heliostat Field	-28.30128299	23.37255998
430	*Olea europea subsp. africana*	1	CSP Heliostat Field	-28.30175699	23.37398599
431	*Olea europea subsp. africana*	1	CSP Heliostat Field	-28.29299304	23.35929704
432	*Olea europea subsp. africana*	1	CSP Heliostat Field	-28.30318803	23.37431498
433	*Olea europea subsp. africana*	1	CSP Heliostat Field	-28.30323799	23.37442202
434	*Olea europea subsp. africana*	1	CSP Heliostat Field	-28.30418003	23.37536498
435	*Olea europea subsp. africana*	1	CSP Heliostat Field	-28.30419797	23.375526
436	*Olea europea subsp. africana*	1	CSP Heliostat Field	-28.30494898	23.37604903
437	*Olea europea subsp. africana*	1	CSP Heliostat Field	-28.30487598	23.37614098
438	*Olea europea subsp. africana*	1	CSP Heliostat Field	-28.30504999	23.37628003
439	*Olea europea subsp. africana*	1	CSP Heliostat Field	-28.30524797	23.37607903
440	*Olea europea subsp. africana*	1	CSP Heliostat Field	-28.300335	23.37862202
441	*Olea europea subsp. africana*	1	CSP Heliostat Field	-28.30638204	23.37668697
442	*Olea europea subsp. africana*	1	CSP Heliostat Field	-28.30644398	23.37672
443	*Olea europea subsp. africana*	1	CSP Heliostat Field	-28.306461	23.37685696

444	*Olea europea subsp. africana*	1	CSP Heliostat Field	-28.29203297	23.363604
445	*Olea europea subsp. africana*	1	CSP Heliostat Field	-28.29443196	23.35750499
446	*Olea europea subsp. africana*	1	CSP Heliostat Field	-28.299847	23.37875697
447	*Olea europea subsp. africana*	1	CSP Heliostat Field	-28.29627296	23.357076
448	*Olea europea subsp. africana*	1	CSP Heliostat Field	-28.30028202	23.377785
449	*Olea europea subsp. africana*	1	CSP Heliostat Field	-28.296194	23.35748898
450	*Olea europea subsp. africana*	1	CSP Heliostat Field	-28.30161701	23.37821097
451	*Olea europea subsp. africana*	1	CSP Heliostat Field	-28.29701602	23.35755
452	*Olea europea subsp. africana*	1	CSP Heliostat Field	-28.30232997	23.37947102
453	*Olea europea subsp. africana*	1	CSP Heliostat Field	-28.29689397	23.35702202
454	*Olea europea subsp. africana*	1	CSP Heliostat Field	-28.30347	23.37847299
455	*Olea europea subsp. africana*	1	CSP Heliostat Field	-28.29732103	23.35633001
456	*Searsia lancea*	1	CSP Heliostat Field	-28.29081299	23.37504596
457	*Searsia lancea*	1	CSP Heliostat Field	-28.29138204	23.37524503
458	*Searsia lancea*	1	CSP Heliostat Field	-28.29770903	23.379596
459	*Searsia lancea*	1	CSP Heliostat Field	-28.29778204	23.37991803
460	*Searsia lancea*	1	CSP Heliostat Field	-28.29872299	23.38009698
461	*Searsia lancea*	1	CSP Heliostat Field	-28.294425	23.37772599
462	*Searsia lancea*	1	CSP Heliostat Field	-28.29447504	23.37771996
463	*Searsia lancea*	1	CSP Heliostat Field	-28.29453003	23.37773798
464	*Searsia lancea*	1	CSP Heliostat Field	-28.294568	23.37781702
465	*Searsia lancea*	1	CSP Heliostat Field	-28.29460404	23.37780604
466	*Searsia lancea*	1	CSP Heliostat Field	-28.29471803	23.37780797
467	*Searsia lancea*	1	CSP Heliostat Field	-28.29471401	23.37791501
468	*Searsia lancea*	1	CSP Heliostat Field	-28.29464997	23.37795901
469	*Olea europea subsp. africana*	1	Evaporation Ponds	-28.31091799	23.358658
470	*Olea europea subsp. africana*	1	Evaporation Ponds	-28.31112804	23.35844502
471	*Olea europea subsp. africana*	1	Evaporation Ponds	-28.31112997	23.358428
472	*Olea europea subsp. africana*	1	Evaporation Ponds	-28.31128302	23.35837604
473	*Olea europea subsp. africana*	1	Evaporation Ponds	-28.31144898	23.35834402
474	*Olea europea subsp. africana*	1	Evaporation Ponds	-28.311552	23.35841199
475	*Olea europea subsp. africana*	1	Evaporation Ponds	-28.31151604	23.35845298
476	*Olea europea subsp. africana*	1	Evaporation Ponds	-28.31153297	23.35847402
477	*Olea europea subsp. africana*	1	Evaporation Ponds	-28.31145602	23.35851501
478	*Olea europea subsp. africana*	1	Evaporation Ponds	-28.31140699	23.35859799
479	*Olea europea subsp. africana*	1	Evaporation Ponds	-28.31132602	23.35866898
480	*Olea europea subsp. africana*	1	Evaporation Ponds	-28.31131202	23.35873897
481	*Olea europea subsp. africana*	1	Evaporation Ponds	-28.31123499	23.35867301
482	*Olea europea subsp. africana*	1	Evaporation Ponds	-28.31123801	23.35873403
483	*Olea europea subsp. africana*	1	Evaporation Ponds	-28.31122099	23.35874501
484	*Olea europea subsp. africana*	1	Evaporation Ponds	-28.31116701	23.35870997
485	*Olea europea subsp. africana*	1	Evaporation Ponds	-28.31109401	23.35882002
486	*Olea europea subsp. africana*	1	Evaporation Ponds	-28.31101698	23.35886403
487	*Olea europea subsp. africana*	1	Evaporation Ponds	-28.31094598	23.35883603
488	*Olea europea subsp. africana*	1	Evaporation Ponds	-28.31086703	23.35895799

489	*Olea europea subsp. africana*	1	Evaporation Ponds	-28.31088899	23.359002
490	*Olea europea subsp. africana*	1	Evaporation Ponds	-28.31086501	23.35957096
491	*Olea europea subsp. africana*	1	Evaporation Ponds	-28.31085999	23.35968403
492	*Olea europea subsp. africana*	1	Evaporation Ponds	-28.31091497	23.359736
493	*Olea europea subsp. africana*	1	Evaporation Ponds	-28.31095696	23.35971697
494	*Olea europea subsp. africana*	1	Evaporation Ponds	-28.311092	23.35976701
495	*Olea europea subsp. africana*	1	Evaporation Ponds	-28.31098203	23.35961698
496	*Olea europea subsp. africana*	1	Evaporation Ponds	-28.31099703	23.35959703
497	*Olea europea subsp. africana*	1	Evaporation Ponds	-28.31102301	23.359534
498	*Olea europea subsp. africana*	1	Evaporation Ponds	-28.31102201	23.35945697
499	*Olea europea subsp. africana*	1	Evaporation Ponds	-28.31111899	23.359549
500	*Olea europea subsp. africana*	1	Evaporation Ponds	-28.31114899	23.35952503
501	*Olea europea subsp. africana*	1	Evaporation Ponds	-28.31113097	23.35945303
502	*Olea europea subsp. africana*	1	Evaporation Ponds	-28.31129299	23.35955897
503	*Olea europea subsp. africana*	1	Evaporation Ponds	-28.311423	23.359391
504	*Olea europea subsp. africana*	1	Evaporation Ponds	-28.31137204	23.35918204
505	*Olea europea subsp. africana*	1	Evaporation Ponds	-28.311351	23.35912001
506	*Olea europea subsp. africana*	1	Evaporation Ponds	-28.31134999	23.359046
507	*Olea europea subsp. africana*	1	Evaporation Ponds	-28.31117498	23.35919403
508	*Olea europea subsp. africana*	1	Evaporation Ponds	-28.31109602	23.35903401
509	*Olea europea subsp. africana*	1	Evaporation Ponds	-28.31108504	23.35902303
510	*Olea europea subsp. africana*	1	Evaporation Ponds	-28.31109803	23.35897802
511	*Olea europea subsp. africana*	1	Evaporation Ponds	-28.31113701	23.35900602
512	*Olea europea subsp. africana*	1	Evaporation Ponds	-28.31115	23.35891197
513	*Olea europea subsp. africana*	1	Evaporation Ponds	-28.31112896	23.35886604
514	*Olea europea subsp. africana*	1	Evaporation Ponds	-28.31122996	23.35873302
515	*Olea europea subsp. africana*	1	Evaporation Ponds	-28.31123298	23.35873403
516	*Olea europea subsp. africana*	1	Evaporation Ponds	-28.31133096	23.358874
517	*Olea europea subsp. africana*	1	Evaporation Ponds	-28.31134999	23.35900501
518	*Olea europea subsp. africana*	1	Evaporation Ponds	-28.31160899	23.35886898
519	*Olea europea subsp. africana*	1	Evaporation Ponds	-28.31160204	23.35884802
520	*Olea europea subsp. africana*	1	Evaporation Ponds	-28.31162299	23.35885297
521	*Olea europea subsp. africana*	1	Evaporation Ponds	-28.31165199	23.35882698
522	*Olea europea subsp. africana*	1	Evaporation Ponds	-28.31161	23.35883201
523	*Olea europea subsp. africana*	1	Evaporation Ponds	-28.31158703	23.35882296
524	*Olea europea subsp. africana*	1	Evaporation Ponds	-28.31157798	23.358816
525	*Olea europea subsp. africana*	1	Evaporation Ponds	-28.31159298	23.35872799
526	*Olea europea subsp. africana*	1	Evaporation Ponds	-28.31153599	23.35864099
527	*Olea europea subsp. africana*	1	Evaporation Ponds	-28.311539	23.35863797
528	*Olea europea subsp. africana*	1	Evaporation Ponds	-28.31154998	23.35863797
529	*Olea europea subsp. africana*	1	Evaporation Ponds	-28.31156096	23.35860503
530	*Olea europea subsp. africana*	1	Evaporation Ponds	-28.31160103	23.35862104
531	*Olea europea subsp. africana*	1	Evaporation Ponds	-28.31161201	23.35866697
532	*Olea europea subsp. africana*	1	Evaporation Ponds	-28.31163104	23.35865599
533	*Olea europea subsp. africana*	1	Evaporation Ponds	-28.31165803	23.35869798

534	*Olea europea subsp. africana*	1	Evaporation Ponds	-28.31175802	23.35867401
535	*Olea europea subsp. africana*	1	Evaporation Ponds	-28.31177202	23.35866102
536	*Olea europea subsp. africana*	1	Evaporation Ponds	-28.31177303	23.35863504
537	*Olea europea subsp. africana*	1	Evaporation Ponds	-28.31175802	23.35861199
538	*Olea europea subsp. africana*	1	Evaporation Ponds	-28.31179096	23.35869597
539	*Olea europea subsp. africana*	1	Evaporation Ponds	-28.31177202	23.35875498
540	*Olea europea subsp. africana*	1	Evaporation Ponds	-28.31175098	23.35886403
541	*Olea europea subsp. africana*	1	Evaporation Ponds	-28.31177898	23.35892002
542	*Olea europea subsp. africana*	1	Evaporation Ponds	-28.31179599	23.35897702
543	*Olea europea subsp. africana*	1	Evaporation Ponds	-28.31184603	23.35897199
544	*Olea europea subsp. africana*	1	Evaporation Ponds	-28.31183597	23.35893301
545	*Olea europea subsp. africana*	1	Evaporation Ponds	-28.31193899	23.35888498
546	*Olea europea subsp. africana*	1	Evaporation Ponds	-28.31196296	23.358974
547	*Olea europea subsp. africana*	1	Evaporation Ponds	-28.31196799	23.35902999
548	*Olea europea subsp. africana*	1	Evaporation Ponds	-28.31176196	23.35915698
549	*Olea europea subsp. africana*	1	Evaporation Ponds	-28.312128	23.35921599
550	*Olea europea subsp. africana*	1	Evaporation Ponds	-28.31218299	23.35953902
551	*Olea europea subsp. africana*	1	Evaporation Ponds	-28.31214996	23.35954699
552	*Olea europea subsp. africana*	1	Evaporation Ponds	-28.31106098	23.359937
553	*Olea europea subsp. africana*	1	Evaporation Ponds	-28.31079503	23.35988604
554	*Olea europea subsp. africana*	1	Evaporation Ponds	-28.31066703	23.35988302
555	*Olea europea subsp. africana*	1	Evaporation Ponds	-28.31059503	23.36004504
556	*Olea europea subsp. africana*	1	Evaporation Ponds	-28.31061498	23.36017496
557	*Olea europea subsp. africana*	1	Evaporation Ponds	-28.31064197	23.36029097
558	*Olea europea subsp. africana*	1	Evaporation Ponds	-28.31042999	23.36040303
559	*Olea europea subsp. africana*	1	Evaporation Ponds	-28.31031701	23.36047201
560	*Olea europea subsp. africana*	1	Evaporation Ponds	-28.31026001	23.36005602
561	*Olea europea subsp. africana*	1	Evaporation Ponds	-28.31015297	23.35987799
562	*Olea europea subsp. africana*	1	Evaporation Ponds	-28.30996203	23.35969099
563	*Olea europea subsp. africana*	1	Evaporation Ponds	-28.30990101	23.35953902
564	*Olea europea subsp. africana*	1	Evaporation Ponds	-28.30954998	23.35934297
565	*Olea europea subsp. africana*	1	Evaporation Ponds	-28.30924404	23.35906201
566	*Olea europea subsp. africana*	1	Evaporation Ponds	-28.30921403	23.35900501
567	*Olea europea subsp. africana*	1	Evaporation Ponds	-28.30966397	23.35732402
568	*Olea europea subsp. africana*	1	Evaporation Ponds	-28.30970898	23.35716703
569	*Olea europea subsp. africana*	1	Evaporation Ponds	-28.30979196	23.35699503
570	*Olea europea subsp. africana*	1	Evaporation Ponds	-28.30981996	23.35685698
571	*Olea europea subsp. africana*	1	Evaporation Ponds	-28.30982096	23.35686402
572	*Olea europea subsp. africana*	1	Evaporation Ponds	-28.30998299	23.35673997
573	*Olea europea subsp. africana*	1	Evaporation Ponds	-28.31001702	23.35673301
574	*Olea europea subsp. africana*	1	Evaporation Ponds	-28.30999698	23.35667199
575	*Olea europea subsp. africana*	1	Evaporation Ponds	-28.31011903	23.35653302
576	*Olea europea subsp. africana*	1	Evaporation Ponds	-28.31027401	23.35654501
577	*Olea europea subsp. africana*	1	Evaporation Ponds	-28.31022598	23.35668297
578	*Olea europea subsp. africana*	1	Evaporation Ponds	-28.31013302	23.356788

579	*Olea europea subsp. africana*	1	Evaporation Ponds	-28.31010402	23.35680602
580	*Olea europea subsp. africana*	1	Evaporation Ponds	-28.31006597	23.35680996
581	*Olea europea subsp. africana*	1	Evaporation Ponds	-28.31000797	23.35692203
582	*Olea europea subsp. africana*	1	Evaporation Ponds	-28.30995097	23.35699897
583	*Olea europea subsp. africana*	1	Evaporation Ponds	-28.30988299	23.35712302
584	*Olea europea subsp. africana*	1	Evaporation Ponds	-28.30984804	23.35727398
585	*Olea europea subsp. africana*	1	Evaporation Ponds	-28.309884	23.35752502
586	*Olea europea subsp. africana*	1	Evaporation Ponds	-28.30994904	23.35748898
587	*Olea europea subsp. africana*	1	Evaporation Ponds	-28.30999799	23.35745201
588	*Olea europea subsp. africana*	1	Evaporation Ponds	-28.31002599	23.35743601
589	*Olea europea subsp. africana*	1	Evaporation Ponds	-28.31004099	23.35741899
590	*Olea europea subsp. africana*	1	Evaporation Ponds	-28.310043	23.35740197
591	*Olea europea subsp. africana*	1	Evaporation Ponds	-28.31004904	23.35739099
592	*Olea europea subsp. africana*	1	Evaporation Ponds	-28.31010503	23.357421
593	*Olea europea subsp. africana*	1	Evaporation Ponds	-28.310115	23.35743701
594	*Olea europea subsp. africana*	1	Evaporation Ponds	-28.310028	23.35751999
595	*Olea europea subsp. africana*	1	Evaporation Ponds	-28.31011198	23.35729301
596	*Olea europea subsp. africana*	1	Evaporation Ponds	-28.31012397	23.35725797
597	*Olea europea subsp. africana*	1	Evaporation Ponds	-28.31025003	23.35728304
598	*Olea europea subsp. africana*	1	Evaporation Ponds	-28.310344	23.35727197
599	*Olea europea subsp. africana*	1	Evaporation Ponds	-28.31035104	23.35714599
600	*Olea europea subsp. africana*	1	Evaporation Ponds	-28.31041499	23.35711003
601	*Olea europea subsp. africana*	1	Evaporation Ponds	-28.31048196	23.35710903
602	*Olea europea subsp. africana*	1	Evaporation Ponds	-28.31062504	23.357061
603	*Olea europea subsp. africana*	1	Evaporation Ponds	-28.31059403	23.35725202
604	*Olea europea subsp. africana*	1	Evaporation Ponds	-28.31049596	23.35749803
605	*Olea europea subsp. africana*	1	Evaporation Ponds	-28.31043201	23.35756701
606	*Olea europea subsp. africana*	1	Evaporation Ponds	-28.31039596	23.35757799
607	*Olea europea subsp. africana*	1	Evaporation Ponds	-28.31039303	23.35760901
608	*Olea europea subsp. africana*	1	Evaporation Ponds	-28.31035104	23.35762803
609	*Olea europea subsp. africana*	1	Evaporation Ponds	-28.31026998	23.35786399
610	*Olea europea subsp. africana*	1	Evaporation Ponds	-28.31025297	23.35786399
611	*Olea europea subsp. africana*	1	Evaporation Ponds	-28.31020301	23.35792098
612	*Olea europea subsp. africana*	1	Evaporation Ponds	-28.31016404	23.35796096
613	*Olea europea subsp. africana*	1	Evaporation Ponds	-28.310186	23.35802601
614	*Olea europea subsp. africana*	1	Evaporation Ponds	-28.31017904	23.35805702
615	*Olea europea subsp. africana*	1	Evaporation Ponds	-28.31016596	23.35807102
616	*Olea europea subsp. africana*	1	Evaporation Ponds	-28.31015599	23.358096
617	*Olea europea subsp. africana*	1	Evaporation Ponds	-28.31020201	23.35814796
618	*Olea europea subsp. africana*	1	Evaporation Ponds	-28.31023403	23.358125
619	*Olea europea subsp. africana*	1	Evaporation Ponds	-28.31035699	23.35795602
620	*Olea europea subsp. africana*	1	Evaporation Ponds	-28.31038096	23.35795702
621	*Olea europea subsp. africana*	1	Evaporation Ponds	-28.31052102	23.35771898
622	*Olea europea subsp. africana*	1	Evaporation Ponds	-28.31064197	23.35760398
623	*Olea europea subsp. africana*	1	Evaporation Ponds	-28.31087197	23.35741698

624	*Olea europea subsp. africana*	1	Evaporation Ponds	-28.31086803	23.35744699
625	*Olea europea subsp. africana*	1	Evaporation Ponds	-28.31088999	23.35745302
626	*Olea europea subsp. africana*	1	Evaporation Ponds	-28.31088999	23.35748102
627	*Olea europea subsp. africana*	1	Evaporation Ponds	-28.31093299	23.35749501
628	*Olea europea subsp. africana*	1	Evaporation Ponds	-28.31092302	23.357535
629	*Olea europea subsp. africana*	1	Evaporation Ponds	-28.31086501	23.357694
630	*Olea europea subsp. africana*	1	Evaporation Ponds	-28.31085102	23.35769601
631	*Olea europea subsp. africana*	1	Evaporation Ponds	-28.31083903	23.35768897
632	*Olea europea subsp. africana*	1	Evaporation Ponds	-28.31082403	23.35768696
633	*Olea europea subsp. africana*	1	Evaporation Ponds	-28.31081497	23.35766299
634	*Olea europea subsp. africana*	1	Evaporation Ponds	-28.310805	23.357637
635	*Olea europea subsp. africana*	1	Evaporation Ponds	-28.31071598	23.35789399
636	*Olea europea subsp. africana*	1	Evaporation Ponds	-28.310704	23.35790698
637	*Olea europea subsp. africana*	1	Evaporation Ponds	-28.31077902	23.35782601
638	*Olea europea subsp. africana*	1	Evaporation Ponds	-28.31091296	23.35784999
639	*Olea europea subsp. africana*	1	Evaporation Ponds	-28.311021	23.35776399
640	*Olea europea subsp. africana*	1	Evaporation Ponds	-28.31108102	23.35774496
641	*Olea europea subsp. africana*	1	Evaporation Ponds	-28.31110599	23.35774496
642	*Olea europea subsp. africana*	1	Evaporation Ponds	-28.31113298	23.35774999
643	*Olea europea subsp. africana*	1	Evaporation Ponds	-28.31118604	23.35786197
644	*Olea europea subsp. africana*	1	Evaporation Ponds	-28.31118101	23.357867
645	*Olea europea subsp. africana*	1	Evaporation Ponds	-28.31115603	23.357881
646	*Olea europea subsp. africana*	1	Evaporation Ponds	-28.311121	23.35793196
647	*Olea europea subsp. africana*	1	Evaporation Ponds	-28.31109904	23.35789802
648	*Olea europea subsp. africana*	1	Evaporation Ponds	-28.311092	23.35788402
649	*Olea europea subsp. africana*	1	Evaporation Ponds	-28.31108001	23.35787497
650	*Olea europea subsp. africana*	1	Evaporation Ponds	-28.31105604	23.35787899
651	*Olea europea subsp. africana*	1	Evaporation Ponds	-28.31103299	23.357938
652	*Olea europea subsp. africana*	1	Evaporation Ponds	-28.31097499	23.35792802
653	*Olea europea subsp. africana*	1	Evaporation Ponds	-28.31097096	23.35792802
654	*Olea europea subsp. africana*	1	Evaporation Ponds	-28.31093903	23.35795501
655	*Olea europea subsp. africana*	1	Evaporation Ponds	-28.31103299	23.35804604
656	*Olea europea subsp. africana*	1	Evaporation Ponds	-28.31101698	23.358097
657	*Olea europea subsp. africana*	1	Evaporation Ponds	-28.31091497	23.358126
658	*Olea europea subsp. africana*	1	Evaporation Ponds	-28.31086099	23.35807202
659	*Olea europea subsp. africana*	1	Evaporation Ponds	-28.31089301	23.35812299
660	*Olea europea subsp. africana*	1	Evaporation Ponds	-28.310877	23.35814101
661	*Olea europea subsp. africana*	1	Evaporation Ponds	-28.310819	23.358139
662	*Olea europea subsp. africana*	1	Evaporation Ponds	-28.31078799	23.35814796
663	*Olea europea subsp. africana*	1	Evaporation Ponds	-28.31055304	23.35947599
664	*Olea europea subsp. africana*	1	Evaporation Ponds	-28.31054097	23.35922898
665	*Olea europea subsp. africana*	1	Evaporation Ponds	-28.31065002	23.35925899
666	*Olea europea subsp. africana*	1	Evaporation Ponds	-28.31071297	23.35923702
667	*Olea europea subsp. africana*	1	Evaporation Ponds	-28.31072303	23.35928304
668	*Olea europea subsp. africana*	1	Evaporation Ponds	-28.31072797	23.359305

669	*Olea europea subsp. africana*	1	Evaporation Ponds	-28.31072797	23.359377
670	*Olea europea subsp. africana*	1	Evaporation Ponds	-28.31081397	23.359305
671	*Olea europea subsp. africana*	1	Evaporation Ponds	-28.31085102	23.35930098
672	*Olea europea subsp. africana*	1	Evaporation Ponds	-28.31054902	23.35908799
673	*Olea europea subsp. africana*	1	Evaporation Ponds	-28.31059998	23.35893896
674	*Olea europea subsp. africana*	1	Evaporation Ponds	-28.31062898	23.358888
675	*Olea europea subsp. africana*	1	Evaporation Ponds	-28.31067701	23.35891097
676	*Olea europea subsp. africana*	1	Evaporation Ponds	-28.31071498	23.35887099
677	*Olea europea subsp. africana*	1	Evaporation Ponds	-28.310718	23.35882799
678	*Olea europea subsp. africana*	1	Evaporation Ponds	-28.31071598	23.35878398
679	*Olea europea subsp. africana*	1	Evaporation Ponds	-28.31082604	23.35850998
680	*Babiana bainesii*	1	Evaporation Ponds	-28.31023998	23.36026699
681	*Babiana bainesii*	1	Evaporation Ponds	-28.30929198	23.35773197
682	*Hereroa carinans*	1	Evaporation Ponds	-28.31081397	23.35930198
683	*Pachypodium succulentum*	1	Evaporation Ponds	-28.31047199	23.35709503

Appendix E

Rehabilitation Plan

REVEGETATION & REHABILITATION PLAN:

ACWA POWER SOLARRESERVE REDSTONE SOLAR THERMAL POWER PLANT, REMAINDER OF THE FARM 469, POSTMASBURG, NORTHERN CAPE PROVINCE

PRODUCED FOR SOLARRESERVE

SIMON TODD CONSULTING

Simon.Todd@3foxes.co.za

December 2015

BACKGROUND & PURPOSE

The purpose of the Redstone CSP Revegetation and Rehabilitation plan is to ensure that areas cleared or impacted during construction activities of the proposed Facility are rehabilitated with a plant cover that reduces the risk of erosion from these areas as well as restores ecosystem function. The purpose the rehabilitation at the site can be summarized as follows:

- Achieve long-term stabilisation of all disturbed areas to minimise erosion potential;
- Re-vegetate all disturbed areas with suitable local plant species;
- Minimise visual impact of disturbed areas; and
- Ensure that disturbed areas are safe for future uses.

It is also important to recognize that the rehabilitation plan should also be closely aligned with the other management plans for the site as revegetation, site management and erosion are inextricably linked.

ECOSYSTEM CONTEXT

The site occurs within an arid environment which receives less than 300mm annual rainfall. A fundamentally different approach to rehabilitation efforts in such areas is required as compared to traditional rehabilitation approaches within more mesic areas. In addition, rehabilitation techniques which rely on agricultural techniques such as the application of fertilizer and the planting of annual grasses or other alien species are not appropriate. The major implication of the semi-arid nature of the site is that the use of appropriate species and techniques is a key factor in order to achieve long-term success. Due to the arid nature of the area, rehabilitation of disturbed areas is likely to be difficult and potentially costly and minimising the disturbance footprint is the key to reducing the overall footprint and impact of the development.

REHABILITATION MANAGEMENT PRINCIPLES

Topsoil management

Effective topsoil management is a critical element of rehabilitation, particularly in arid areas where soil properties are a fundamental determinant of vegetation composition and abundance. Where any excavation or topsoil clearing is required, the topsoil should be used immediately where possible or stockpiled and later used to cover cleared and disturbed areas once construction activity has ceased.

- Topsoil is the top-most layer (0-25cm) of the soil in undisturbed areas. This soil layer is important as it contains nutrients, organic matter, seeds, micro-organisms fungi and soil fauna. All these elements are necessary for soil processes such as nutrient cycling and the growth of new plants. The biologically active upper layer of the soil is fundamental in the maintenance of the entire ecosystem. There are however some parts of the site on rocky ridges or exposed calcrete where there is little to no topsoil. In these areas, the upper layers should not be

removed and stockpiled as there is no soil structure and recovery in these areas occur more spontaneously as a result.

- Topsoil should be retained on site in order to be used for site rehabilitation. The correct handling of the topsoil is a key element to rehabilitation success. Firstly it is important that the correct depth of topsoil is excavated. If the excavation is too deep, the topsoil will be mixed with sterile deeper soil, leading to reduction in nutrient levels and a decline in plant performance on the soil. It is recommended that no more than the top 10cm of topsoil are stored and used for rehabilitation.
- Wherever possible, stripped topsoil should be placed directly onto an area being rehabilitated. This avoids stockpiling and double handling of the soil. Topsoil placed directly onto rehabilitation areas contains viable seed, nutrients and microbes that allow it to revegetate more rapidly than topsoil that has been in stockpile for long periods.
- If direct transfer is not possible, the topsoil should be stored separately from other soil heaps until construction in an area is complete. The soil should not be stored for a long time and should be used as soon as possible. The longer the topsoil is stored, the more seeds, micro-organisms and soil biota are killed.
- Ideally stored topsoil should be used within a month and should not be stored for longer than three months. In addition, topsoil stores should not be too deep, a maximum depth of 1m is recommended to avoid compaction and the development of anaerobic conditions within the soil.
- If topsoil is stored on a slope then sediment fencing should be used downslope of the stockpile in order to intercept any sediment and runoff should be directed away from the stockpiles upslope.

MULCHING

Mulching is the covering of the soil with a layer of organic matter of leaves, twigs bark or wood chips, usually chopped quite finely. The main purpose of mulching is to protect and cover the soil surface as well as serve as a source of seed for revegetation purposes.

- Some parts of the site are dominated by Tarchonanthus and this plant material could potentially be used for mulching. Cleared material can be fed through a shredder or chipper and the shredded material used to cover bare areas of ground. This can help to limit dust as well as increase the organic matter in the soil, trap seeds and generally encourage the recovery of the vegetation. The material should however not be applied in very thick layers as this prevents seeds emerging. A layer when fresh of 10-20cm is usually sufficient depending on the texture of the material.
- During site clearing the standing woody vegetation should not be mixed with the soil, but where significant biomass is present it can be cleared separately. The cleared vegetation should be stockpiled and used whole or shredded by hand or machine to protect the soil in disturbed areas and promote the return of indigenous species. Where there is a low shrub or grass layer, this

material can be cleared and mixed as part of the topsoil as this will aid revegetation and recovery when it is reapplied.

- Material for mulch should be harvested from areas that are to be denuded of vegetation during construction activities, provided that they are free of seed-bearing alien invasive plants;
- No harvesting of vegetation may be done outside the area to be disturbed by construction activities;
- Brush-cut mulch should be stored for as short a period as possible, and seed released from stockpiles can also be collected for use in the rehabilitation process.
- Based on the existing PV plants at the site, recovery of the grass layer is fairly rapid in most areas and mulching can be used in problem areas where recovery of the grass layer is slow due to repeated disturbance or loss of seeds in the soil.

SEEDING

In some areas the natural regeneration of the vegetation may be poor and the application of seed to enhance vegetation recovery may be required. Seed should be collected from plants present at the site and should be used immediately or stored appropriately and used at the start of the following wet season. Seed can be broadcast onto the soil, but should preferably be applied in conjunction with measures to improve seedling survival such as scarification of the soil surface or simultaneous application of mulch.

- Indigenous seeds may be harvested for purposes of re-vegetation in areas that are free of alien or invasive vegetation, either at the site prior to clearance or from suitable neighbouring sites;
- Seed may be harvested by hand and if necessary dried or treated appropriately;
- Seed gathered by vacuum harvester, or other approved mass collection method, from suitable shrubs or from the plant litter surrounding the shrubs must be kept apart from individually harvested seed;
- No seed of alien or foreign species should be used or bought onto the site.
- In context of the site, probably the best candidates for reseeding would be the indigenous grasses of the site, such as *Eragrostis lehmanniana* and *Cynodon dactylon*.

TRANSPLANTS

Where succulent plants are available or other species which may survive translocation are present, individual plants can be dug out from areas about to be cleared and planted into areas which require revegetation. This can be an effective means of establishing indigenous species quickly and within the context of the current site, this is likely to be an effective means of rehabilitation on some areas because establishing perennial species from seed in this arid environment is likely to be challenging. The primary

purpose of using transplants is not to restore plant cover to its' former levels, but rather to provide nodes of biological activity and a source of propagules that can spread and recover disturbed areas on their own. As such transplants should be planted in clumps rather than as isolated individuals.

- Plants for transplant should preferably be removed from areas that are going to be cleared.
- Succulent shrubs and geophytes are the most suitable candidates for transplant. Most woody species are not likely to survive transplant once the roots have been disturbed.
- Transplants should be placed within a similar environment from where they came in terms of aspect, slope and soil depth.
- Transplants must remain within the site and may not be transported off the site.
- There are not a lot of species suitable for transplant at the site and this should be done opportunistically if there are species present which may survive and if conditions in terms of rainfall and moisture conditions are favourable.

USE OF SOIL SAVERS

In areas where seed and organic matter retention is low, it is recommended that soil savers are used to stabilise the soil surface. Wind and water erosion are likely to be potential issues at the site following construction and measures to protect the soil surface including soil savers may to be necessary. Soil savers are man-made materials, usually constructed of organic material such as hemp or jute and are usually applied in areas where traditional rehabilitation techniques are not likely to succeed.

- In areas where soil saver is used, it should be pegged down to ensure that is captures soil and organic matter flowing over the surface.
- Soil saver may be seeded directly once applied as the holes in the material catch seeds and provide suitable microsites for germination. Alternatively, fresh mulch containing seed can be applied to the soil saver.

GENERAL RECOMMENDATIONS

- Progressive rehabilitation is an important element of the rehabilitation strategy and should be implemented where feasible.
- Once revegetated, areas should be protected to prevent trampling and erosion.
- No construction equipment, vehicles or unauthorised personnel should be allowed onto areas that have been vegetated.
- Where rehabilitation sites are located within actively grazed areas, they should be fenced.
- Fencing should be removed once a sound vegetative cover has been achieved.
- Any runnels, erosion channels or wash-aways developing after revegetation should be backfilled and consolidated and the areas restored to a proper stable condition.

MONITORING REQUIREMENTS

As rehabilitation success, particularly in arid areas is unpredictable, monitoring and follow-up actions are important to achieve the desired cover and soil protection.

- Re-vegetated areas should be monitored every 6 months for the first 18 months following construction.
- Re-vegetated areas showing inadequate surface coverage (less than 10% within 12 months after re-vegetation) should be prepared and re-vegetated;
- Any areas showing erosion, should be re-contoured and seeded with indigenous grasses or other locally occurring species which grow quickly.

CONCLUSIONS AND RECOMMENDATIONS

- The most cost-effective way to reduce the cost and effort for rehabilitation is to reduce and minimize the disturbance footprint. Particular attention should be paid to the location of temporary-use areas such as any lay-down areas which should be located in disturbed areas.
- The soil at the site is fairly finely textured and dust is highly likely to be an issue during the construction of the facility. As a result, specific measures to reduce dust and protect the soil are likely to be required. The simplest solution to this problem is to minimise the amount of vegetation clearing at the site.
- No seed or plants from outside of the area should be brought onto the site for rehabilitation purposes. If established plants must be brought onto the site for rehabilitation, then these should be grown from seed or vegetative material collected on-site. This is because, even within a single species, there are local variants adapted to the local conditions and plants from elsewhere can contaminate the local gene pool.
- The natural recovery of the vegetation at the site is generally good after disturbance due to the quick recovery of the grass layer. However, areas that are repeatedly disturbed or which have their topsoil removed are slower to recover and these areas are likely to be the areas where active rehabilitation will need to focus.

Appendix F

Grievance Mechanism

Grievance Mechanism

ACWA POWER SOLARRESERVE REDSTONE SOLAR THERMAL POWER PLANT

SolarReserve South Africa
December 1, 2015

GRIEVANCE MECHANISM

AIM

This grievance mechanism provides stakeholders, and interested and affected parties with the means raise concerns, grievances and legitimate complaints resulting from the Project and/or any of its associated activities. This grievance mechanism has been designed to effectively deal with complaints from communities, or all other parties filing a complaint on their behalf in a (i) quick and timely manner, (ii) independent, transparent, fair and impartially and will be (iii) easily accessible to the public.

The grievance mechanism is led by the IFC - Good Practice Note Addressing Grievances from Project-Affected Communities.

GENERAL ITEMS

The grievance mechanism must be evaluated on an annual basis in order to determine the effectiveness of the mechanism.

Monthly monitoring and reporting will be done in order to assess and track any grievance registered and in process against the Project.

Local communities, surrounding landowners and local authorities to be informed by the Project Company of the mechanism.

Grievance mechanism does not remove the individual or affected party's right to take legal action against the Project should they feel this is the applicable route to follow.

THE PROCESS

Figure 1: Grievance Mechanism

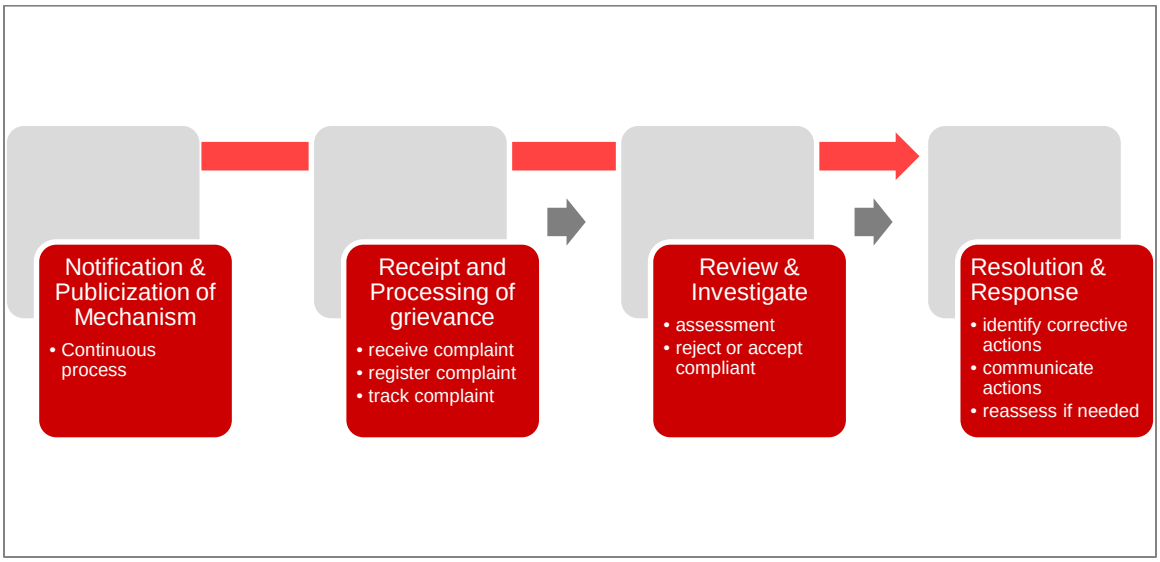

Step 1:	Publicizing Grievance Management Procedures

In order for the grievance mechanism to be effectively implemented it is vital that it be introduced and explained to affected communities. This will allow for a better understanding of the platform and its proposed use. The Project's life expectancy is categorized as a long term development, thus making Step 1 of the grievance mechanism a continuous public communication effort throughout the construction and operational & maintenance phase of the Project, rather than a once of notification.

Step 1 will clarify and explain the following:

i. Who can raise complaints (affected communities)
ii. Where, when, and how community members can file complaints
iii. Who is responsible for receiving and responding to complaints, and any external parties that can take complaints from communities
iv. What sort of response complainants can expect from the Project Company, including timing of response; and
v. Rights and protection that are included in the use of this mechanism.

There are a multitude of methods to consider for communicating this mechanism to the public and affected communities. The relevant mechanism will be chosen once the Project enters the pre-construction and construction phase and awareness of the Project is being raised in local communities. This mechanism will be defined in a Method Statement and approved by the ECO, EM and the Project Company.

Methods to be explored that may applicable to the Project and the region is defined in the table below.

Table 1: Methods for Publicizing

Method	Consideration
Face-to-Face Meetings (group or individual)	Face-to-face interaction is also effective where literacy levels are low. Group meetings work especially well where each impact of operations on communities affects at least several people. Individual meetings would be more appropriate when an issue is specific to one person. They are also helpful when it is difficult to organize a group meeting and communities are relatively small but dispersed. Various existing platforms to use such as community or social gatherings, town meetings, elders meetings. Provides opportunity to get message across in a clear and concise manner to all literacy levels. It allows for the use of audio, visual and other implements to be used to notify the public. .

Method	Consideration
Printed Materials, Grievance Forms (for written complaints)	They should be visually engaging and easy to understand, especially where literacy levels are low. Grievance forms for written complaints can also include key facts about the procedure.
Displays (stands, wall mounts, billboards)	Displays are useful to show key facts about the grievance mechanism or to publicize contact information for grievances. This is a very effective way to communicate to communities that live in close proximity to the Project
Company Representatives (grievance officers, community liaison officers, employees)	Establish a personal connection with local communities through a local presence. Communicating through employees or workers is very effective if they originate from the affected communities. Equip employees with necessary information about grievance procedures; where grievance procedures are fairly complex, consider providing training for employees.
Third Parties (community structures, NGOs, local governments, contractors)	Make sure third parties communicate messages correctly and do not engage in negotiations with communities. The communication materials will inform communities about third parties that are authorized to speak on the behalf of the Project Company
Online (Web site)	If information about the mechanism is provided on the company web site, then publicize the Web site to communities through methods described above.
Training Sessions (for communities)	Consider bringing project management staff (e.g., environmental division, project operations management) and communities together during training sessions to facilitate understanding of project operations.

Step 2: Receiving and Keeping Track of Grievances

Once the grievance mechanism has been publicized and communities are aware of the means by which this mechanism can be activated, it becomes the Project Company's responsibility to process all matters raised using this mechanism.

The second step entails the processing of grievances received. This is done by means of (i) collecting/receiving grievances; (ii) recording the grievances; (iii) registration of the grievance; and (iv) tracking thereof throughout the processing cycle.

(i) Collecting and receiving grievances

- Grievances to be submitted to central person for processing.
- Any persons may submit a grievance related to the Project.

(ii) Recording of grievance

- Recording and acknowledgement of all incoming grievances within 48 hours of receipt.

(iii) Registration of the grievance

Grievances submitted to the Project to be logged in a Grievance Record, stating date received, by who, matter/grievance lodged, name of complainant.

- A formal written confirmation to be issued to complainant.
  This will explain up front what claims clearly are outside the scope of the mechanism and what alternative avenues communities can use to address these potential issues.
  This will also depict the process to be followed to resolve the compliant and the timelines associated with the process.

(iv) Tracking grievance

The Project Company will establish a Grievance Log and Database in order to track all grievances lodged and the status thereof.

- Upon registration of a complaint/grievance, the Project Company creates a record that contains the following:
  - details of the complainant;
  - details of the incident;
  - the contractor/persons responsible for resolving the incident; and
  - process-tracking, i.e. receipt date, status, result date.

Once the complaint is resolved, a final report on the incident is issued to the Project Company and ECO for record purposes. The database and grievance log will be made accessible to the ECO and CA at times of audits.

Step 3:	Reviewing and Investigating Grievances

Speedily and timely resolution of grievance is the most important component of grievance mechanism.

During this step of the process the compliant/grievance will be validated in terms of legitimacy and the Project Company will arrange for investigation of details to take place.

The nature and circumstances of the complaint, will determine the nature and degree of interaction from the various contractors and subcontractors and even the Project Company.

(i) Establishment of the nature of the grievance.
(ii) Determination of the measures required for review and investigation process.

Minor Grievance: [1]	A screening process will be implemented prior to resolving and responding to the grievance.
Major Grievances:	These types of grievances are often as a result of deeper underlying issues may exist, and require more time and a more detailed assessment prior to the resolution and the response thereto. Committee review will be instigated in the event of a major classed grievance submission.

(iii) Grievance Action plan

This task will allow for the development of grievance specific actions to be identified and implemented in order to address the item at hand. Responsibility will be allocated to a "case officer" whom will on behalf of the Project Company address and manage the process. The case officer will be responsible for drafting an investigation action plan for approval by the ECO and the Project Company prior to the commencement of the investigation and remedial measures.

(iv) Meetings and feedback sessions

It is vital that the Project Company understand the grievance and thus it is proposed, dependent on the nature of the grievance, that a meeting be held between parties involved. In the event the complaint is site specific, i.e. compliant of theft, an onsite investigation will be undertaken in order to make an informed decision.

- This site visit and all meetings will be documented for record purposes.
- Meetings and feedback sessions

(v) Acceptance or Rejection of grievance

During this investigation the validity of the grievance will be determined with respect to the nature of the grievance versus the Project activity or persons responsible. Grievance will be adjudicated in order to determine if they require resolution or not. In the event no further action will be take, as the grievance was found to be invalid, the case officer will issue the complainant with a detailed statement/explanation on why it was rejected along with the required evidence.

Grievances that will not be addressed by this mechanism include, but is not limited to, and will be resolved and addressed by an alternative forum to be implemented by the Contractor, in line with the applicable discipline:

- Labour related grievances
- Commercial disputes
- Governmental disputes or matters arising from political interference
- Criminal activities not related to the Project
- Non-project related.

[1] Minor and major grievances will be defined by means of a method statement reviewed and accepted by the ECO/EM or CER and approved by the SE and Project Company.

Step 4:	Developing Resolution Options and Preparing a Response

Once it has been determined that a grievance is relevant to the Project and it is accepted, it is the responsibility of the case officer and his/her support staff to resolve and communication this resolution to the public or affected party. This entails a two way process.

Phase 1: Preliminary Response

This response will take place in accordance with the action plan generated by the case officer for the specific grievance. It will be presented within the allocated timeframes and will present all the corrective actions proposed, and implementation responsibilities agreed to be the complainant and the Project Company.

The outcome of this response can either be accepted or rejected by the complainant. If it is accepted the process moves to the final response phase where the grievance is closed out.

If the outcome is rejected, the case officer will reassess the alternatives and remedial/corrective actions proposed and if required include external mechanisms to resolve the issue. Hereafter this process continues to the final phase.

Phase 2: Final Response

If the outcome of the preliminary response was accepted the grievance is closed out and evidence of the investigation, communications and resolution i.e. corrective/remedial actions are recorded and documented.

If the outcome did not pass the standard or approval criteria for the complainant and the external resolution path was followed, the matter is handed to the Project Company for external resolution with the complainant.

Grievance resolution can result in three close out categories. Resolved, unresolved and abandoned.

Resolved – Complaint/grievance was resolved to the satisfaction of both parties. The resolution agreed upon was implemented and the complainant has confirmed satisfaction with the result.

Unresolved – The resolution agreed upon did not deliver the required results. In the event that this outcome is reached this grievance will be settled by an external mechanism or alternatively an appeals committee.

Abandoned – Close out is categorized as abandoned in the event no response is received from the complainant after 30 days of issuing the preliminary response.

Each grievance resolution will result in a close out report. Evidence to be included in this report include, but is not limited to the following:

- Photographic evidence
- Internal record of resolution
- Minutes of the meeting with the complainant in terms of te concluding meeting.
- Letter of confirmation from complainant in terms of receipt of resolution and level of satisfaction.

Appendix G

Stormwater Management Plan

JOB DESCRIPTION / PROYECTO:

CONCENTRATED SOLAR POWER REDSTONE

CLIENT / CLIENTE:

ACWA POWER SOLARRESERVE

CONSORTIUM / CONSORCIO:

acciona Industrial

ORIGINATOR / EMISOR:

EMPRESARIOS AGRUPADOS

TITLE / TÍTULO:

STORMWATER MANAGEMENT PLAN

Size / Formato	Project /Proyecto	Grupo/Zona	Discipline, Department/ Disciplina, Área	Document Type / Tipo Documento	Transmitter /Emisor	Serial number Número /
A4	CSR	00	IC	CA	EAI	0042

Document Code / Código Documento	CSR-00-IC-CA-EAI-0042	Internal Document Code / Codigo interno entidad emisora
		461-00-F-C-90600

REVISION	Date / Fecha	Motivo revisión / Descriptión	Prep. / Realiz.	Verif. / Revisado	Aprob.
1	2015-10-30	Information	AGB	AHM	AEW

Project:

CONCENTRATED SOLAR POWER REDSTONE

Title:

STORMWATER MANAGEMENT PLAN

EAI Document No.:	461-00-F-C-90600	Issue: 1
Document No.:	**CSR-00-IC-CA-EAI-0042**	
Purpose of issue:	Information	Date: 2015-10-30

Prepared: AGB

Reviewed: AHM

Approved: AEW

EMPRESARIOS AGRUPADOS

EMPRESARIOS AGRUPADOS INTERNACIONAL, S.A.

Magallanes, 3 28015 Madrid - España

CLASSIFICATION

Contains information for the design of structures, systems or components: Yes ☐ No ☒

Design verification : Not applicable ☐ Head of OU/Supervisor ☒ Verifier Level 1 ☐ Level 2 ☐

CONTROL OF MODIFICATIONS

Issue	Modifications
1	Not applicable, first issue

PRELIMINARY OR PENDING INFORMATION

Issue	Paragraphs	Subject	Status

DISTRIBUTION

External	Internal	No. copies/Format

Table of Contents

Page No.

1. GENERAL

The purpose of this document is to describe the management of the storm water drainage system for the 100 MWe Net Concentrated Solar Power ("CSP") REDSTONE Project located on the remainder of the Farm 469, the Hay District (Administration District), approximately 5 km southeast of the Groenwater community and 30 km east of Postmasburg, in South Africa.

2. DESIGN CONCEPT

The basic purpose of the storm water drainage system is to collect storm water and dispose of it in a suitable discharge location.

The plant area is divided into 2 areas:

- Solar Field
- Power Block

These two areas are indicated in the image below.

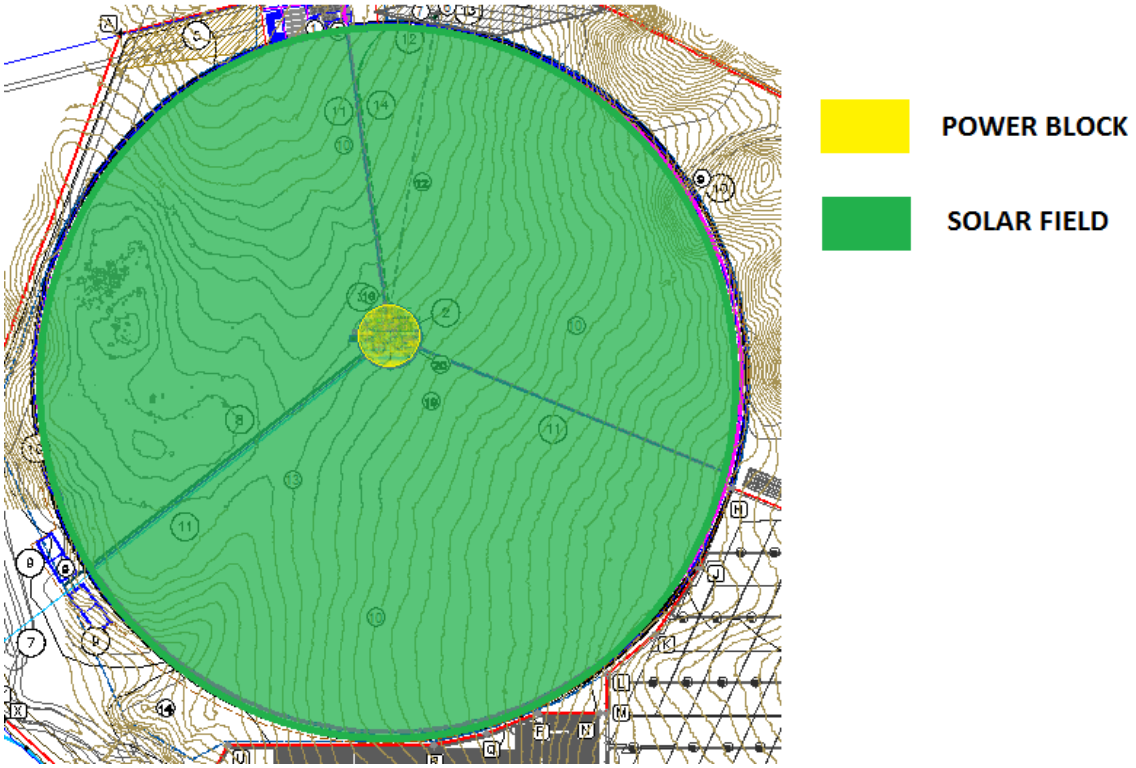

Redstone Solar Power Plant will discharge its liquid effluents into the main following systems:

- Storm water drainage
- Oily water drainage
- Non-Oily water drainage
- Sewage water

Storm water will be conducted to the plant boundary. Terminal points will be selected taking into consideration the natural surface run-off of the plant surroundings.

2.1 SOLAR FIELD

In this area there will be only storm water drainage system. The Project Site, which lies in a shallow valley between two ridgelines at a height of approximately 1500 metres above the sea level (masl), is generally flat. The site slopes gently in a south-westerly direction from 1533 m to 1500 m at a very flat grade of approximately 1 %.

2.1.1 Storm water drainage

Storm water falling outside the solar field will be intercepted and routed to a perimeter channel (see Figure 1 for reference of typical detail). This channel is sloped towards low points, to subsequently discharge superficially outside the parcel trying to follow the natural surface run-off.

According to Environmental Impact Report, the use of heavy machinery for construction of the heliostats will cause soil compaction and result in loss of infiltration capacity. This is likely to generate excess surface water through sheet flow during intense storms. As a result, run-off coefficient inside the solar field will be different from the one considered outside the solar field.

Storm water falling inside the solar field which has not been filtered will be collected in the road ditches or will be discharged outside the parcel through crosses under the perimeter road. The road ditches will be sloped towards low points and they will discharge to the perimeter channel (see Figures 2 to 4 for reference of typical details).

In the next image, perimeter channel and ditches of the roads are shown.

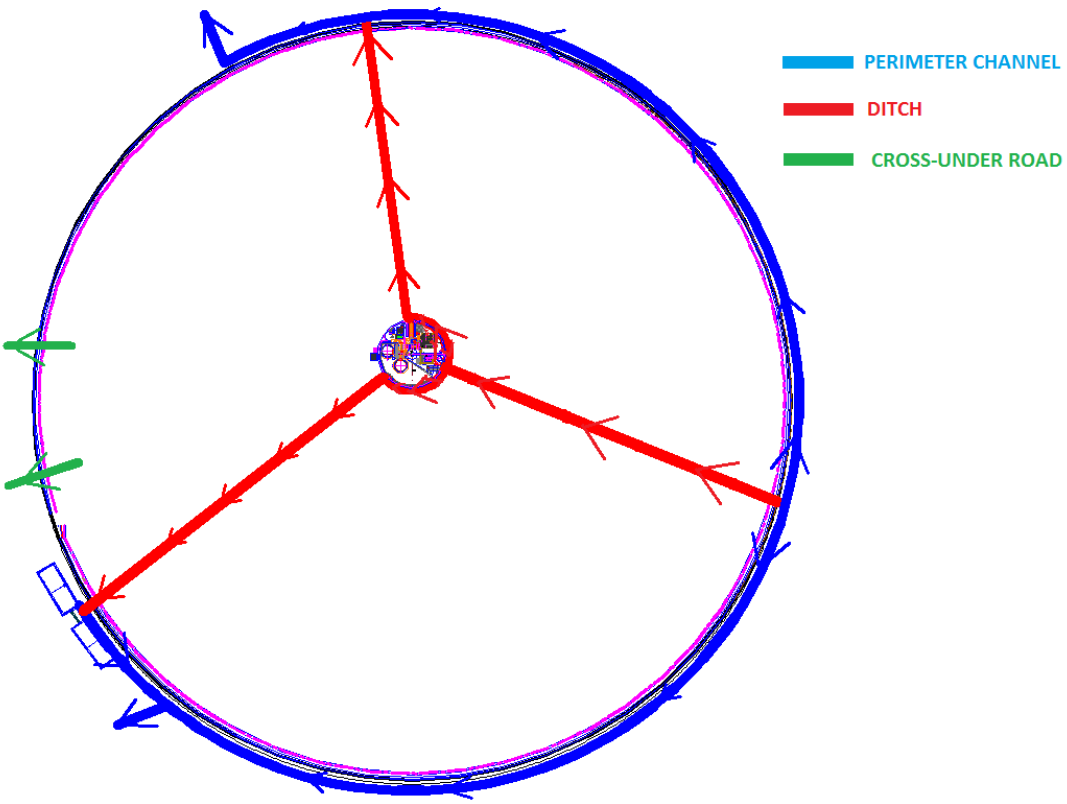

Discharge points must be protected from erosion with some type of energy dissipater. The dissipater may be a designed structure or may be constructed of rock riprap capable of withstanding the velocity of flow from the chute. Rock riprap protects soil from erosion due to concentrated runoff (see Figure 5 to 8 for reference of typical details).

The formation of natural waterways and its slope will be analyzed in the inner regions of the solar field. In these areas water speed will be analyzed and these erosion practices will be established if necessary.

The next image represents all the basins inside the solar field with their principal flows.

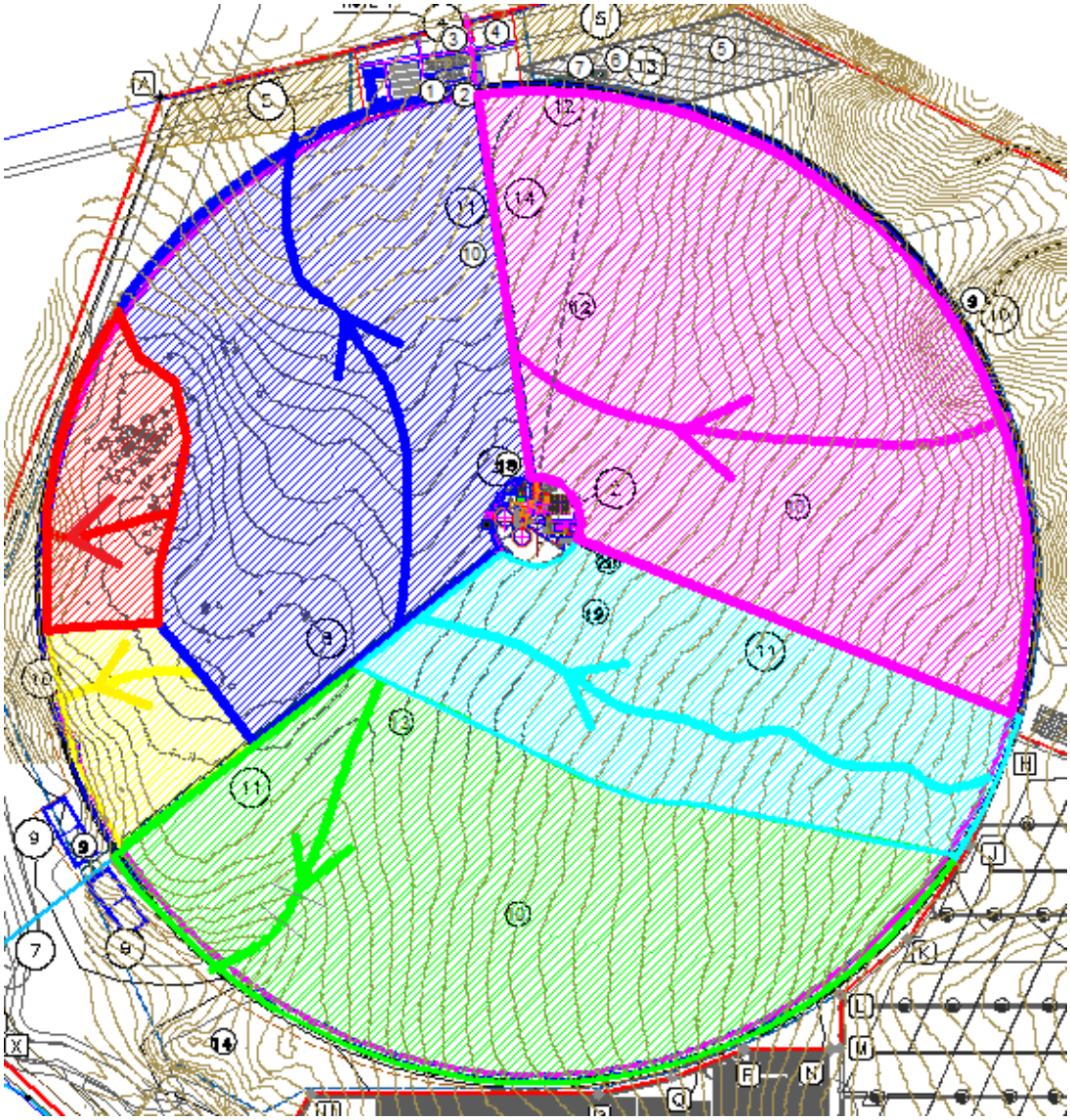

2.2 POWER BLOCK

The following drainages systems will be present in Power Block area:

- Sewage water drainage
- Oily water drainage
- Non-oily water drainage
- Storm water drainage

2.2.1 Sewage water drainage

Sanitary water produced will be conveyed to a sewage treatment plant.

2.2.2 Oily water drainage

There will be a specific drainage network for oily spills in areas where oil, polish or hydrocarbons might be discharged. Equipments which are likely to produce oil spilling will also discharge to oily water drainage network.

Slopes will be formed on the foundation surface in order to convey the spill to the oily water drainage network. Also, these substances are carried away by hosedowns or rainwater towards the provided sinks.

An example of this kind of areas within the Power Block is:

- Transformers containment area
- Inside parking lot, etc.

These oily waters are conducted to a pit (oil/water separator - lamellar decanter). The obtained oil is periodically collected by a certified authority. Additionally, the water collected is led through the non-oily water drainage network to the effluent collection basin.

2.2.3 Non-oily water drainage

Non oily water drainage network will collect the effluent process water and the water collected after oil/water separator – lamellar decanter process.

Non-oily effluent will be treated and then recovered as much as possible into the makeup water system. The effluent which cannot be recovered will be driven to the evaporation pond.

The evaporation pond will be placed in south-west part of the farm, outside the solar field. It will be connected to the perimeter road. The evaporation pond will consist of an embankment dam. The main object of the embankment dam is to guarantee the stability, integrity and water tightness of the evaporation pond.

2.2.4 Power block storm water drainage

Clean and dirty storm water should at all times be kept separate. No dirty storm water may be discharged directly to the ground.

Clean storm water is the rainwater which falls in the power block except in the transformers containment area, inside parking lot and chemical containment bunds. Storm water fallen in molten salt containment area will be considered as clean storm water.

Rainwater shall not penetrate enclosed buildings even in extreme conditions or if a system blockage should occur. Runoff from roofs will be diverted to the rainwater system by means of downspouts. The design and routing of gutters and down-pipes shall be integrated into the architectural and structural design of facilities and shall ensure a durable, leak-free system, while being readily maintainable. Provision shall be made for the easy maintenance and clearing of blockages to all parts of the system with manholes.

The rainwater systems shall be designed and specified for the maximum expected rainfall intensity of a major storm. The rain water run-off system shall consider the surface water of the entire catchment area and the existing run-off ditches and creeks, in the boundary limits.

The network is sloped towards low points, to subsequently discharge superficially to the solar field. The discharge point must be protected from erosion hazards caused by increases in runoff volume and velocity.

ANNEX 1

TYPICAL DRAINAGE DETAILS

Note:

Annex 1 contains typical details for reference.

FIG. 1: TYPICAL CHANNEL (OFF SITE)

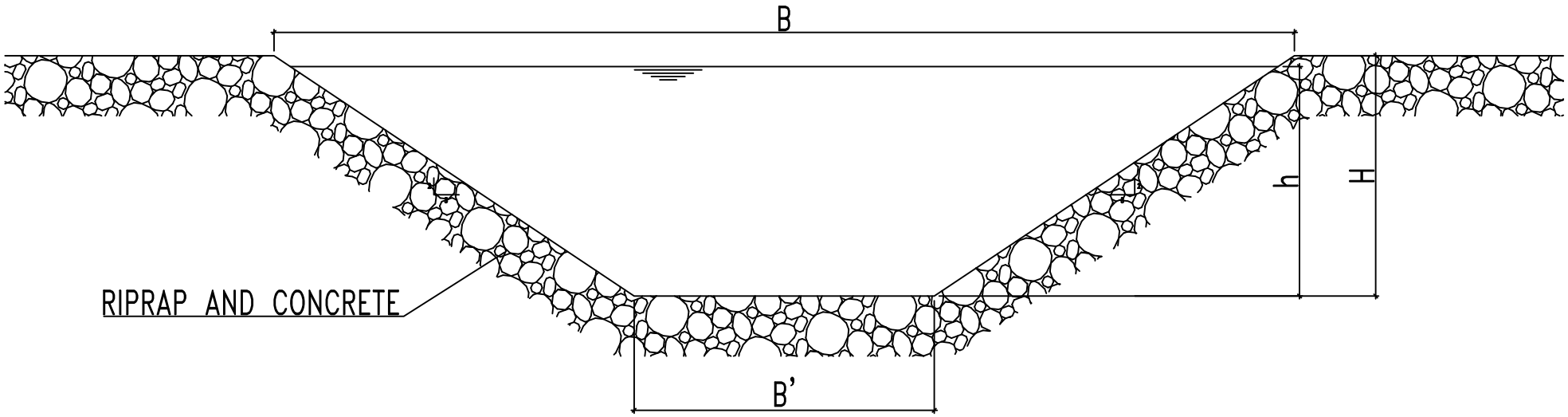

FIG. 2: TYPICAL DITCH

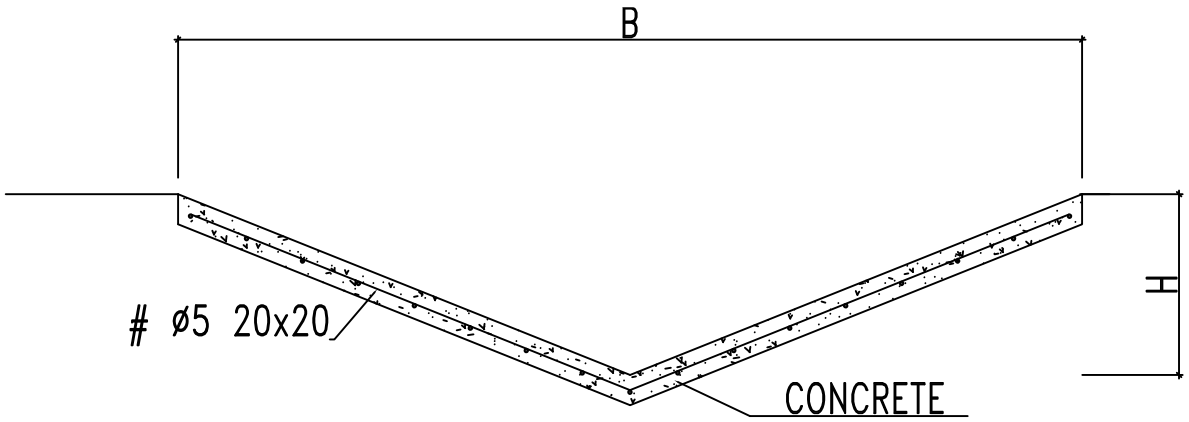

FIG. 3: TYPICAL GUTTER

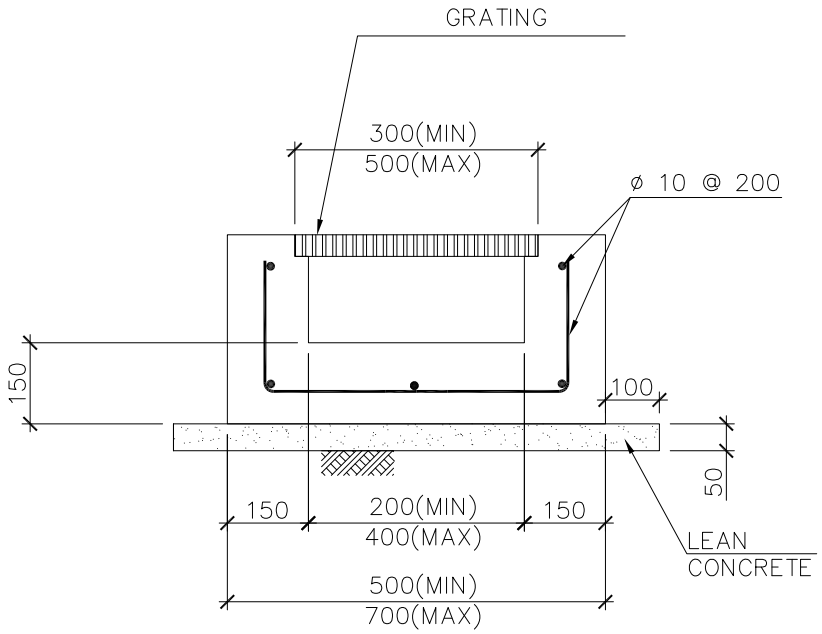

FIG. 4: TYPICAL CHANNEL

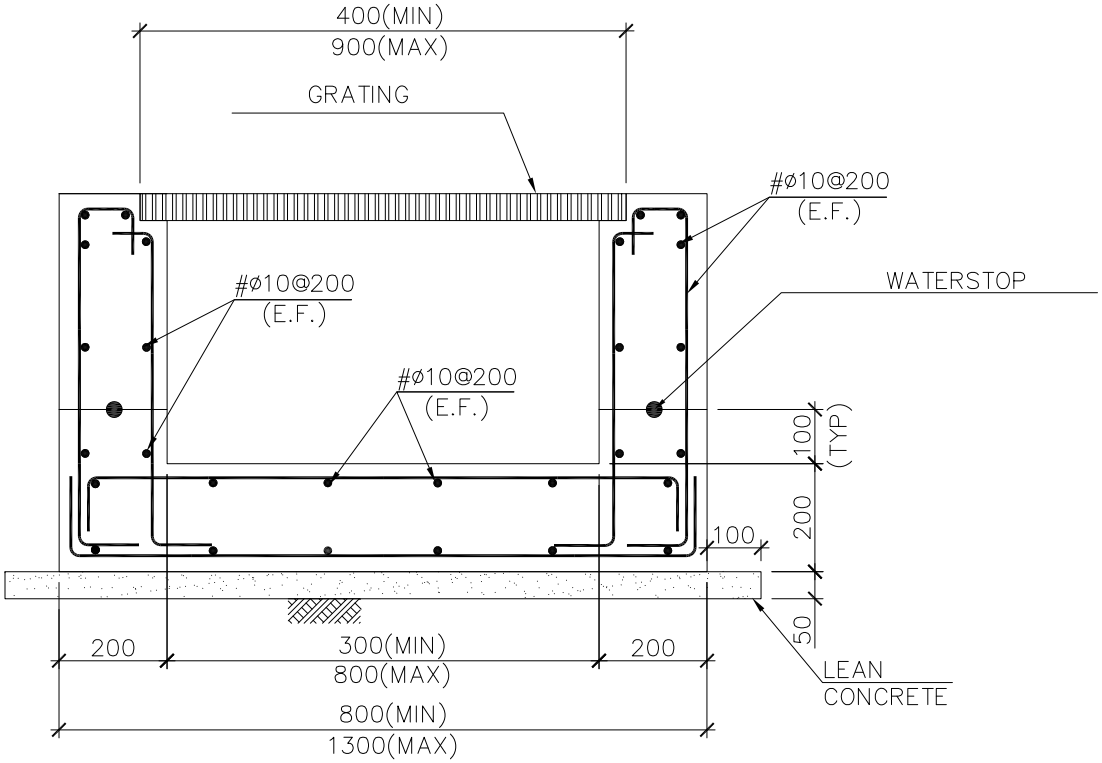

FIG. 5: CROSS DRAINAGE TYPE 1

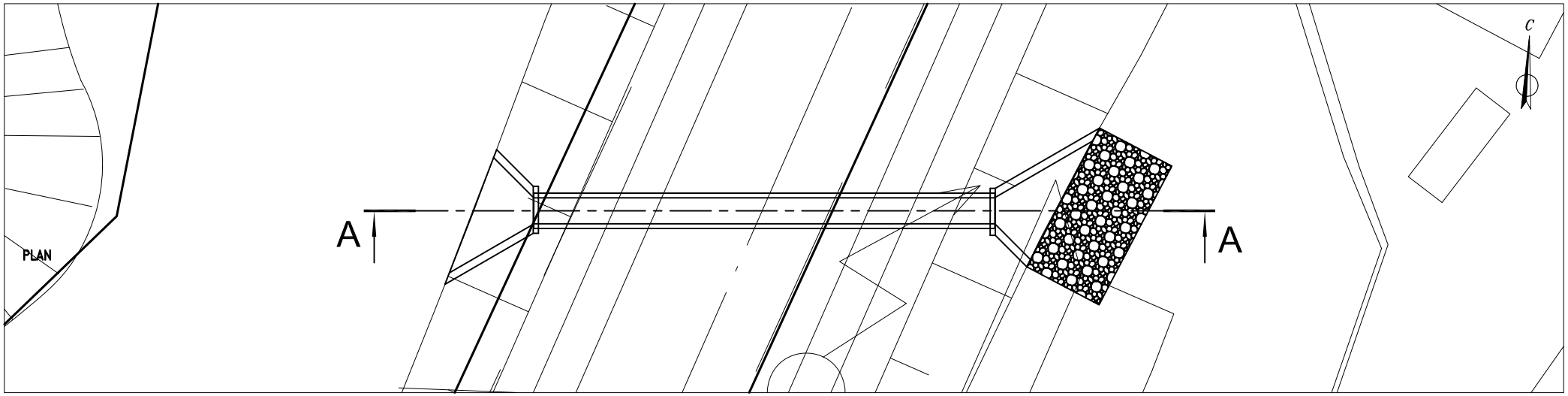

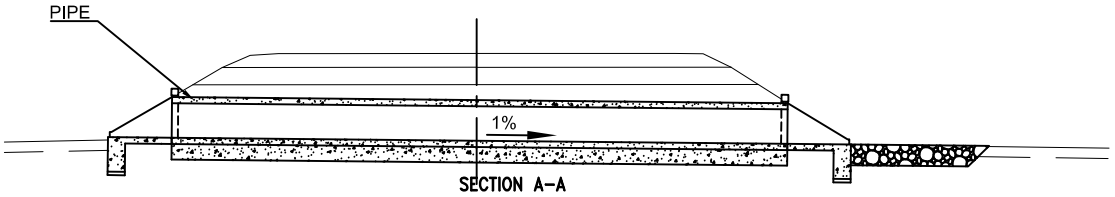

FIG. 6: CROSS DRAINAGE TYPE 2

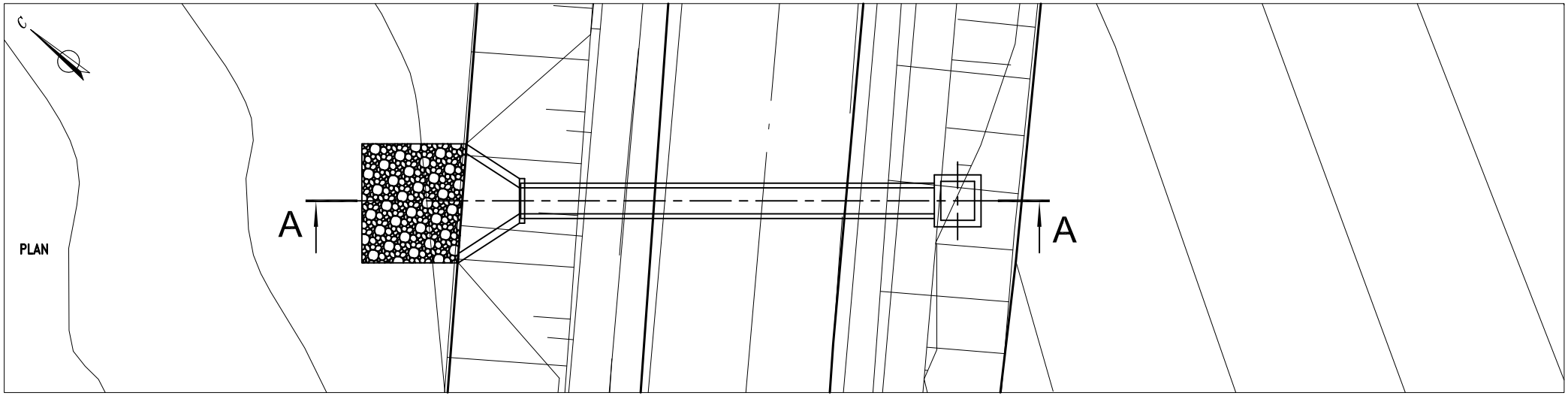

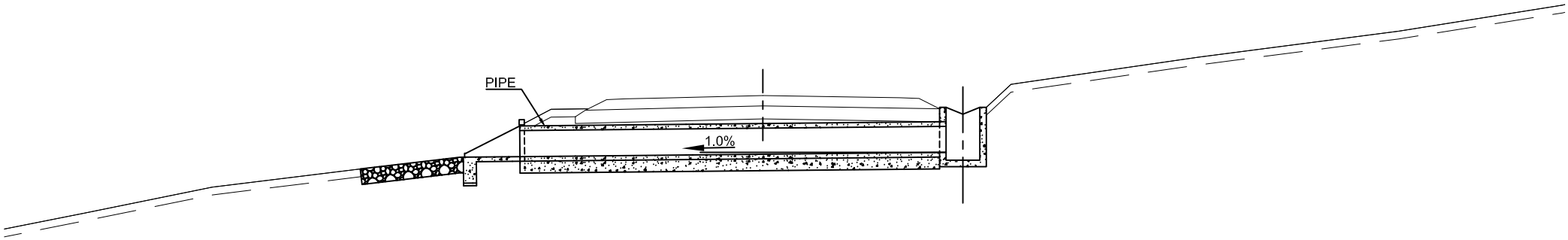

SECTION A–A

FIG. 7: CROSS DRAINAGE TYPE 3

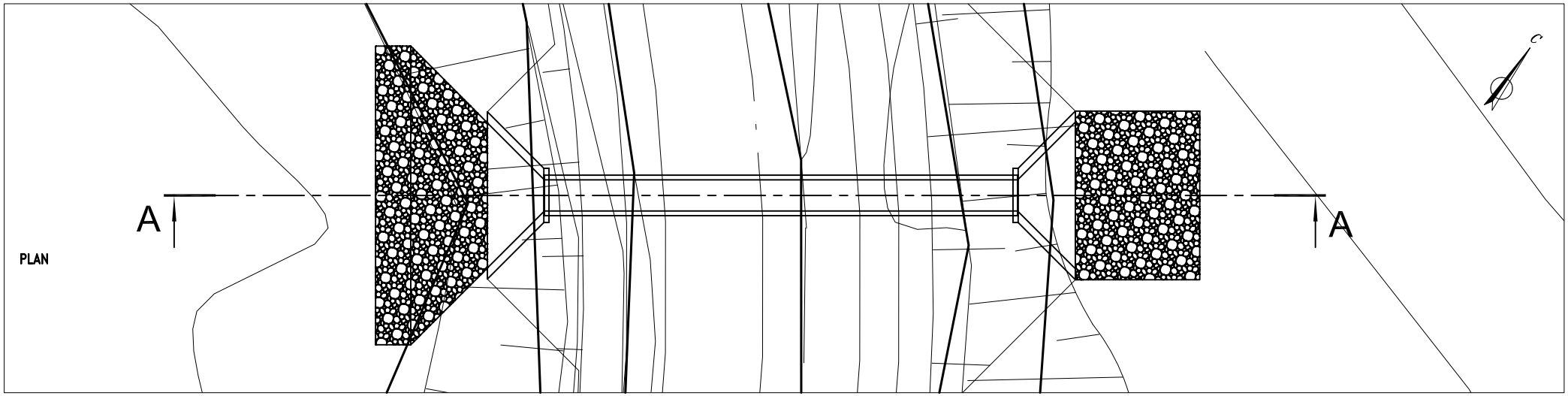

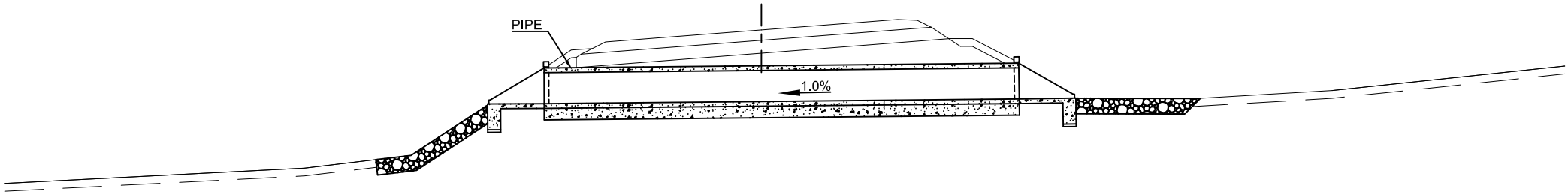

SECTION A–A

FIG. 8: CROSS DRAINAGE DETAIL

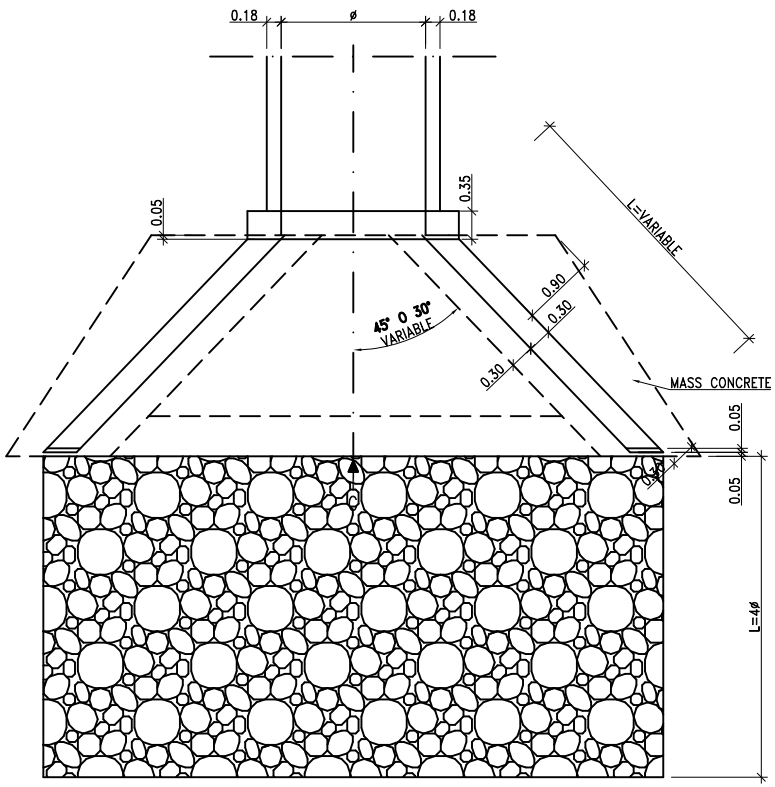

PLAN VIEW

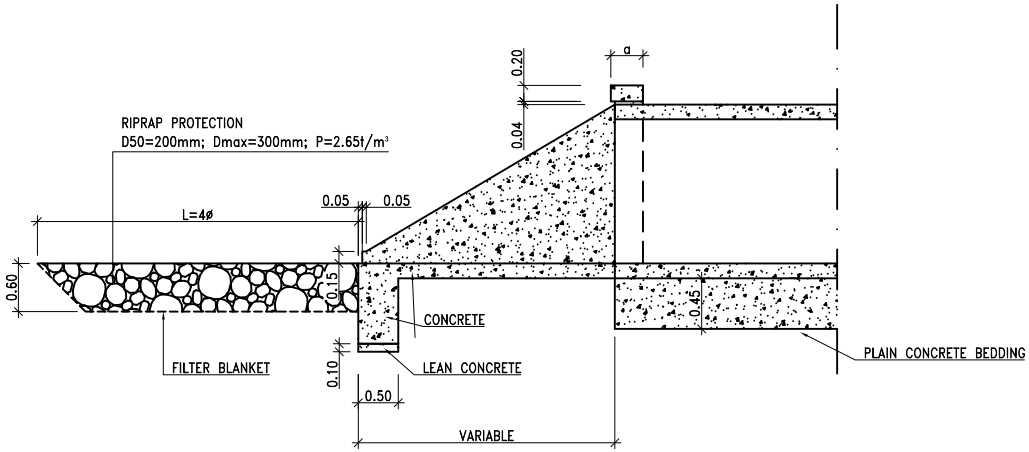

LONGITUDINAL SECTION

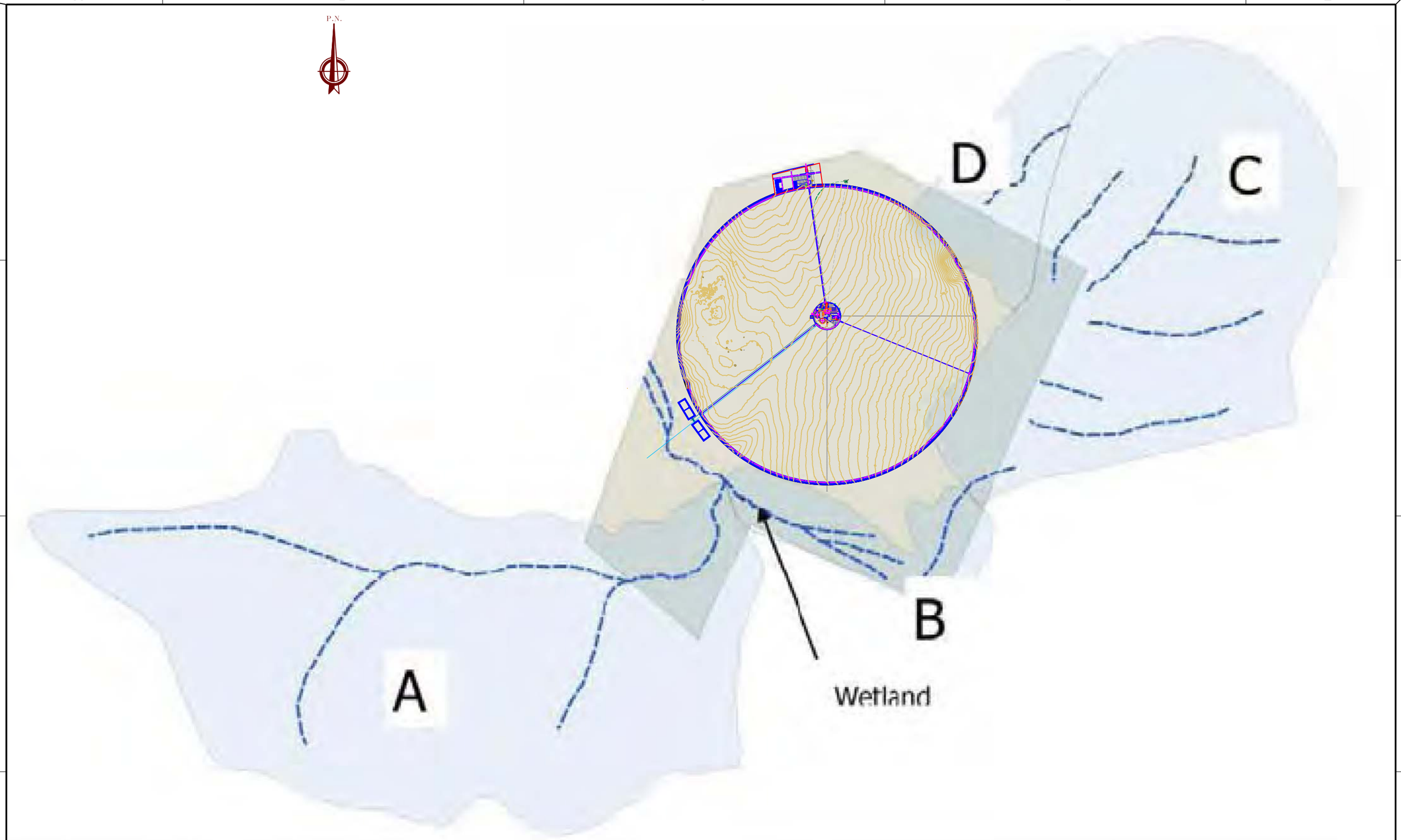

REV.	PURPOSE	DATE	DRAWN	CHECKED	APPROVED
1	ISSUE FOR INFORMATION	2015-10-30	AGB	AHM	AEW

MODIFICATIONS

CONTAINS INFORMATION FOR THE DESIGN OF STRUCTURES SYSTEM OR COMPONENTS ..... YES ☐ NO ☒

VERIFICATION: N/A ☐ SUP. ☒ VERIFIER L1 ☐ L2 ☐

OWNER: ACWA POWER / SOLARRESERVE

FORMAT: A3

SCALE: N/A

EMPRESARIOS AGRUPADOS

PROJECT: Concentrated Solar Power Redstone

EPC CONTRACTOR: acciona Industrial

DRAWING TITLE: GEOGRAPHICAL PLOT PLAN AND WATER COURSES

DRAWING Nº CSR-00-IC-PL-EAI-0128

File: 461-00-D-C-90600

SUBCONTRACTOR Nº 461-00-D-C-90600

SHEET 1 OF 1

REV. 1

SPONSORS/OWNER

EPC CONTRACTOR

PROJECT

CONCENTRATED SOLAR POWER REDSTONE

DOCUMENT TITLE:

WATERCOURSE METHOD STATEMENT

Document Code						If applicable
Project	Group	Issuing discipline	Document Type	Transmitter company	Serial number	Internal Document Code
CSR	00	MA	MS	ACC	0001	N/A

Rev.	Date	Issue for	Drafted by	Reviewed by	Approved by
1	15/10/13	FOR APPROVAL	MMG	AAC	

DOCUMENT CHANGE RECORD

REVISION	REASON OF CHANGE/REMARKS	SECTION/PARAGRAPH

INDICE

1 PURPOSE

This Method Statement will describe and define the MITIGATION MEASURES to control the flow of water on any ordinary watercourse.

2 SCOPE OF WORKS

This Method Statement is applicable to the CSR REDSTONE SOLAR TOWER POWER PLANT Project.

Owner intends to construct and operate a Concentrated Solar Power Plant (CSP) utilizing the Central Receiver Power Tower technology (with molten salt storage). The Redstone Solar Thermal Energy Power Plant is proposed on the Farm 469, the Hay RD, situated in the Northern Cape.

The proposed Redstone Solar Thermal Energy Power Plant entails the construction and operation of a concentrating solar thermal power plant with associated infrastructure and services for the generation of renewable electricity to the national power grid. The project will be capable of producing approximately 480 000 gigawatt-hours (GWh) net of renewable energy annually, with a nominal net generating capacity of approximately 100 megawatts (MW). It is envisaged that the CSP plant will be operated as a mid-merit or base load plant. The power plant will utilize either hybrid or dry cooled technology, dependent on the detail design of the project. Total construction and development costs of the plant are estimated at R6.5 billion.

The CSP plant, as shown in the figure, primarily comprises of four subsystems as summarized below:

- Solar Collector Field: consists of all systems and infrastructure related to the control and operation of the heliostats;
- Molten Salt Circuit: includes the thermal storage tanks for storing low and high temperature liquid salt, a central solar-thermal tower receiver, pipelines and molten salt to steam heat exchangers
- The Power Block: consists of the steam turbine and generator, as well as the air-cooled condenser and associated feed water system.
- Auxiliary facilities and infrastructure: consists of the switch yard, step-up transformers, power transmission lines, access routes, water supplies and facility start-up generators (gas or diesel-fired – dependent on detailed design).

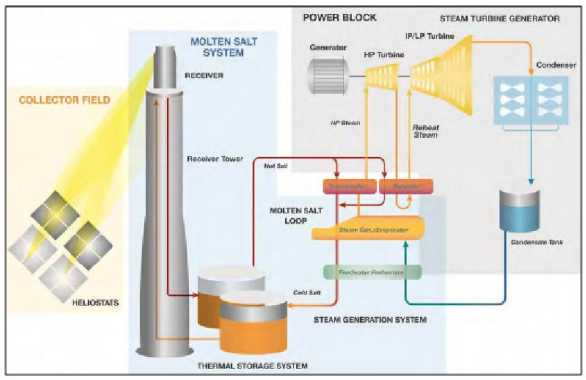

3 LEGAL REQUIREMENTS

ACCIONA Industrial S.A. and any appointed subcontractor shall ensure that all relevant legislation concerning the natural environment, pollution and the built environment is strictly enforced. This Method Statement does consider all applicable environmental legislation, thus compliance with this MS ensures legal compliance. In this regard the laws outlined below are some of the most applicable and important environmental laws in South Africa.

- Constitution of South Africa, 1996 (Act No 108 of 1996);
- Environmental Conservation Act, 1989 (Act No 73 of 1989);
- Hazardous substances Act, 1973 (Act No 15 of 1973);
- National Environmental Management: Biodiversity Act, 2004 (Act No 10 of 2004);
- Conservation of Agricultural Resources Act, 1983 (Act No 43 of 1983);
- National Heritage Resources Act, 1999 (Act No 25 of 1999);
- The National Health Act, 2003 (Act No 61 of 2003);
- Occupational Health and Safety Act, 1993 (Act No 85 of 1993);
- National Environmental Management Act (NEMA) (Act No 107 of 1998), as amended;
- NEMA EIA Regulations, 2010 (Government Notice No R543, No R544 and R545);
- National Water Act (Act No 36 of 1998);
- Noise Control Regulations (PN 5309 of 1998); and
- South African National Standards (SANS): Noise.
- **Final Environmental Impact Report.**
- **Environmental Authorization:** issued by the Department of Environmental Affairs

4 PROGRAMME OF WORKS AND SPECIFICATION

The basic purpose of the storm water drainage system is to collect storm water and dispose of it in a suitable discharge location.
The plant area is divided into 2 areas:

- Solar Field
- Power Block

Redstone Solar Power Plant will discharge its liquid effluents into the main following systems:

- Storm water drainage
- Oily water drainage
- Non-Oily water drainage
- Sewage water

Storm water will be conducted to the plant boundary. Terminal points will be selected taking into consideration the natural surface run-off of the plant surroundings.

Please consult for reference drawing "CSR-00-IC-PL-EAI-0128 GEOGRAPHICAL LAYOUT AND WATER COURSES" and document "CSR-00-IC-CA-EAI-0042 STORMWATER MANEGEMENT PLAN".

4.1 SOLAR FIELD

In this area there will be only storm water drainage system.

4.1.1 STORM WATER DRAINAGE

Storm water falling outside the solar field will be intercepted and routed to a perimeter channel. This channel is sloped towards low points, to subsequently discharge superficially outside the parcel trying to follow the natural surface run-off.
Storm water falling inside the solar field will be collected in the road ditches or will be discharged outside the parcel through crosses under the perimeter road. The road ditches will be sloped towards low points and they will discharge to the perimeter channel.

According to Environmental Impact Report, the use of heavy machinery for construction of the heliostats will cause soil compaction and result in loss of infiltration capacity. This is likely to generate excess surface water through sheet flow during intense storms. As a result, run-off coefficient inside the solar field will be different from the one considered outside the solar field.

In the next image, perimeter channel and ditches of the roads are shown.

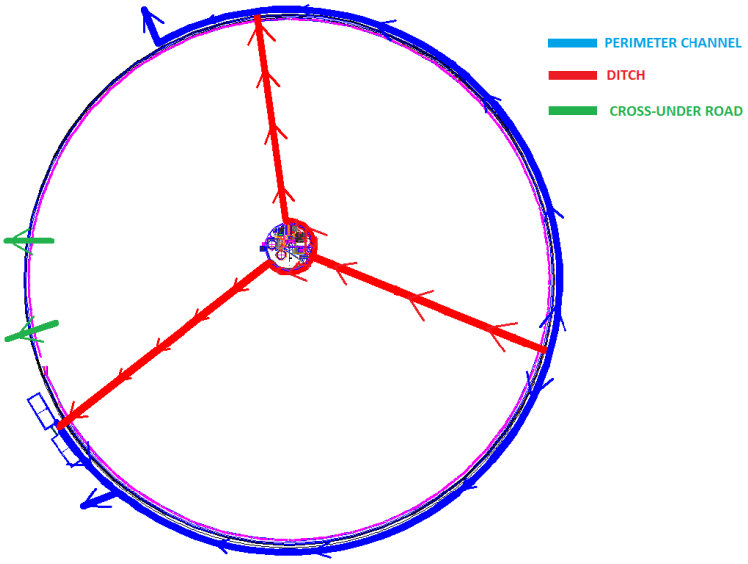

The next image represents all the basins inside the solar field with their principal flows.

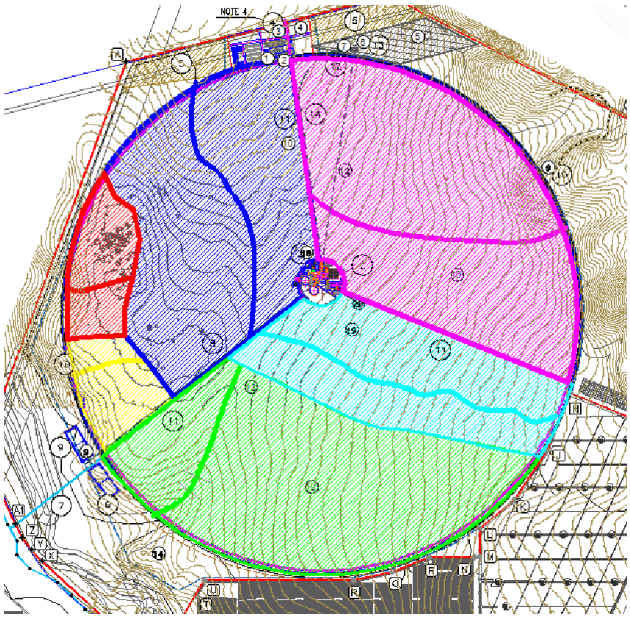

4.2 POWER BLOCK

The following drainages systems will be present in Power Block area:

- Sewage water drainage
- Oily water drainage
- Non-oily water drainage
- Storm water drainage

4.2.1 SEWAGE WATER DRAINAGE

Sanitary water produced will be conveyed to a sewage treatment plant.

4.2.2 OILY WATER DRAINAGE

There will be a specific drainage network for oily spills in areas where oil, polish or hydrocarbons might be discharged. Equipment which are likely to produce oil spilling will also discharge to oily water drainage network.

Slopes will be formed on the foundation surface in order to convey the spill to the oily water drainage network. Also, these substances are carried away by hosedowns or rainwater towards the provided sinks.

An example of this kind of areas within the Power Block is:

- Transformers containment area
- Inside parking lot, etc.

These oily waters are conducted to a pit (oil/water separator - lamellar decanter). The obtained oil is periodically collected by a certified authority. Additionally, the water collected is led through the non-oily water drainage network to the effluent collection basin.

4.2.3 NON-OILY WATER DRAINAGE

Non oily water drainage network will collect the effluent process water and the water collected after oil/water separator – lamellar decanter process and it will be led to the effluent collection basin. After treatment required in the effluent collection basin, the water will be led to the evaporation pond.

The evaporation pond will be placed in south-west part of the farm, outside the solar field. It will be connected to the perimeter road. The evaporation pond will consist of an embankment dam. The main object of the embankment dam is to guarantee the stability, integrity and water tightness of the evaporation pond.

4.2.4 POWER BLOCK STORM WATER DRAINAGE

Clean and dirty storm water should at all times be kept separate. No dirty storm water may be discharged directly to the ground.

Clean storm water is the rainwater which falls in the power block except in the transformers containment area, inside parking lot, effluent collection basin and waste collection storage area. Storm water fallen in molten salt containment area will be considered as clean storm water.

Rainwater shall not penetrate enclosed buildings even in extreme conditions or if a system blockage should occur. Runoff from roofs will be diverted to the rainwater system by means of downspouts. The design and routing of gutters and down-pipes shall be integrated into the architectural and structural design of facilities and shall ensure a durable, leak-free system, while being readily maintainable. Provision shall be made for the easy maintenance and clearing of blockages to all parts of the system with manholes.

The rainwater systems shall be designed and specified for the maximum expected rainfall intensity of a major storm. The rain water run-off system shall consider the surface water of the entire catchment area and the existing run-off ditches and creeks, in the boundary limits.

The network is sloped towards low points, to subsequently discharge superficially to the solar field. The discharge point must be protected from erosion hazards caused by increases in runoff volume and velocity.

5 ENVIRONMENTAL HAZARDS

Some examples of site specific environmental hazards and sensitivities:

- oil or chemical pipelines or deposits
- mains water supply pipelines or de
- high voltage fluid filled cables
- downstream abstractors
- high amenity areas
- sensitive habitats e.g. wetlands

5.1 GROUND AND SURFACE WATER POLLUTION

This section deals with the impact that the construction and operation of the development could have on Ground and surface water pollution.

5.1.1 Sanitation

- Adequate sanitary facilities and ablutions must be provided for construction workers (1 toilet per every 15 workers). These must be linked to the sewer treatment system which comprises of a modular sewer treatment plant with sufficient capacity to process all the sewage generated on the plant.
- The facilities must be regularly serviced to reduce the risk of surface or groundwater pollution.

5.1.2 Hazardous materials

- Controlled use and or storage of materials, fuels and chemicals which could potentially leak into the ground.
- All storage tanks containing hazardous materials must be placed in bunded containment areas with sealed surfaces. The bund walls must be high enough to contain 110% of the total volume of the stored hazardous material.
- Any hazardous substances must be stored at least 20m from any water course.
- The CER should be responsible for ensuring that potentially harmful materials are properly stored in a dry, secure environment, with concrete or sealed flooring and a means of preventing unauthorized entry.
- Contaminated wastewater must be managed by the Site.
- Manager to ensure existing water resources on the site are not contaminated. All wastewater from general activities in the camp shall be collected and removed from the site for appropriate disposal at a licensed commercial facility.
- The diesel storage tanks on site should be housed in a designated area that will allow for easy containment and clean-up of any spills that could occur on site, ideally in a bunded area.
- Drip trays should be used at all refuelling sites to capture small spills during refuelling. Emergency spill procedures must be clearly defined and all staff should be familiar with these procedures.
- Sufficient quantities of absorbent material should be easily available on site for containment of small spills.
- The evaporation dam should be lined with a suitable plastic liner (or series of liners) to ensure no seepage or leakage of water out of the dam occurs. The dam should be regularly inspected and cleaned to ensure that capacity is not decreased due to sedimentation. All sediments/brine cleaned from the dam should be disposed of in a registered hazardous waste facility.

- No discharge of any treated or untreated water will take place on site unless authorised by the DWA

5.1.3 Cement mixing

- Cement contaminated water must not enter the water system as this disturbs the natural acidity of the soil and affects plant growth

5.1.4 Public áreas

- Food preparation areas should be provided with adequate washing facilities and food refuse should be stored in sealed refuse bins which should be removed from site on a regular basis.

- A designated area will be assigned for the purpose of servicing and washing of operational vehicles – vehicles/equipment.

- This area has to have an impermeable surface, and be enclosed. The area has to be equipped with a drainage system – whereby the spilled hydrocarbons are channelled into a sump, to be treated or gathered for disposal at a licensed hazardous waste disposal site.

- All vehicles / equipment need to be kept in good working order to ensure that there are no oil/fuel leakages.

- Drip trays will be used during vehicle servicing at all times. Emergency spill response kits need to be on site at all times – and all personnel needs to have a complete understanding of their function and how to use them.

- The contractor will take steps to ensure that littering by construction workers does not occur and persons should be employed on site to collect litter from the site and immediate surroundings, including litter accumulating at fence lines.

- No washing or servicing of vehicles on site.

5.1.5 Water resources

- Site staff shall not be permitted to use any other open water, body or natural water source adjacent to or within the designated site for the purposes of bathing, washing of clothing or for any construction or related activities.

- Water sources/taps available for drinking water etc. must be pointed out. It is not advisable that a contractor makes use of or collects water from any other source other than those pointed out to them as being suitable for use.
- Treated raw water from the Orange River to be abstracted (or another source approved by the Engineer) should instead be used for all activities such as washing of equipment or disposal of any type of waste, dust suppression, concrete mixing, compacting, etc.

- Department of Water Affairs and the ECO as well as other emergency contact numbers provided by the Municipality should be contacted in order to deal with spillages and contamination of aquatic environments.

- Ensurethat surface/storm water is diverted away from excavations.

- If necessary ensure that stream flow bypasses the construction area within drainage lines.
- Ensure that contaminants are safely stored and away from construction site.
- Sufficient cleaning of pipeline before decommissioning and dismantling.

5.1.6 Hydrotesting (if required)

- In terms of hydrotesting, abstraction from identified water sources, agreed with DWA, will be used for hydrotesting
- Any water discharge will have to comply with the water quality standards as agreed with DWA.
- Both abstraction and discharge permits will have to be obtained from DWA.

5.1.7 Slow leaks

- Regular visual inspection of the entire pipeline should be conducted to detect leakages.

5.1.8 Ruptures

- Installation of remote controlled and/or automatic shut off valves at regular intervals along the system. These valves should be activated by pressure loss in the system or activated on instruction when a major leak is noticed/observed.

5.1.9 Water Flows Across Construction Sites

- Adequate measures will be put into place to control surface water flows across and around all construction sites.
- The quantity of uncontaminated stormwater entering cleared areas will be minimised by appropriate site design and by installation of control structures and drains which direct such flows away from cleared areas and slopes to stable (vegetated) areas or effective treatment installations.
- Site drainage lines will be identified and control measures installed to handle predicted stormwater

5.2 HYDROLOGY AND STORMWATER

This section deals with the impact that the construction and operation of the development could have on hydrology and storm water.

- The site must be managed in order to prevent pollution of drains, downstream watercourses or groundwater, due to suspended solids, silt or chemical pollutants.
- Adequate storm water management in design must be provided that will not aggravate the erosion.

- Silt fences will be used to prevent any soil entering the storm water drains.
- Temporary cut of drains and berms may be required to capture storm water.
- Promote a water saving mind set with construction workers in order to ensure less water wastage.
- New storm water construction must be developed strictly according to specifications from engineers in order to ensure efficiency.
- Hazardous substances must be stored at least 20m away from the buffer area surrounding any water course on site to avoid pollution.
- The installation of the storm water system must take place as soon as possible after commencement of construction, to attenuate storm water from the construction phase as well as the operation phase.
- Earth, stone and rubble is to be properly disposed of so as not to obstruct natural water path ways over the site i.e. these materials must not be placed in storm water channels or water courses.
- There should be a periodic checking of the site's drainage system to ensure that the water flow is unobstructed.
- If a batching plant is necessary, run-off should be managed effectively to avoid contamination of other areas of the site.
- Run-off from the batch plant must not be allowed to get into the stormwater system or nearby streams, rivers or erosion channels or dongas.
- All activities on-site must comply with the requirements of the National Environmental Management: Air Quality Act (Act No. 39 of 2004).

6 EMERGENCY MITIGATION

Whenever an environmental emergency appears, it shall be notified to the EPC Contractor immediately. An investigation report will be prepared in order to prevent new dangerous situations and to mitigate the consequences of the damages the accident has caused.

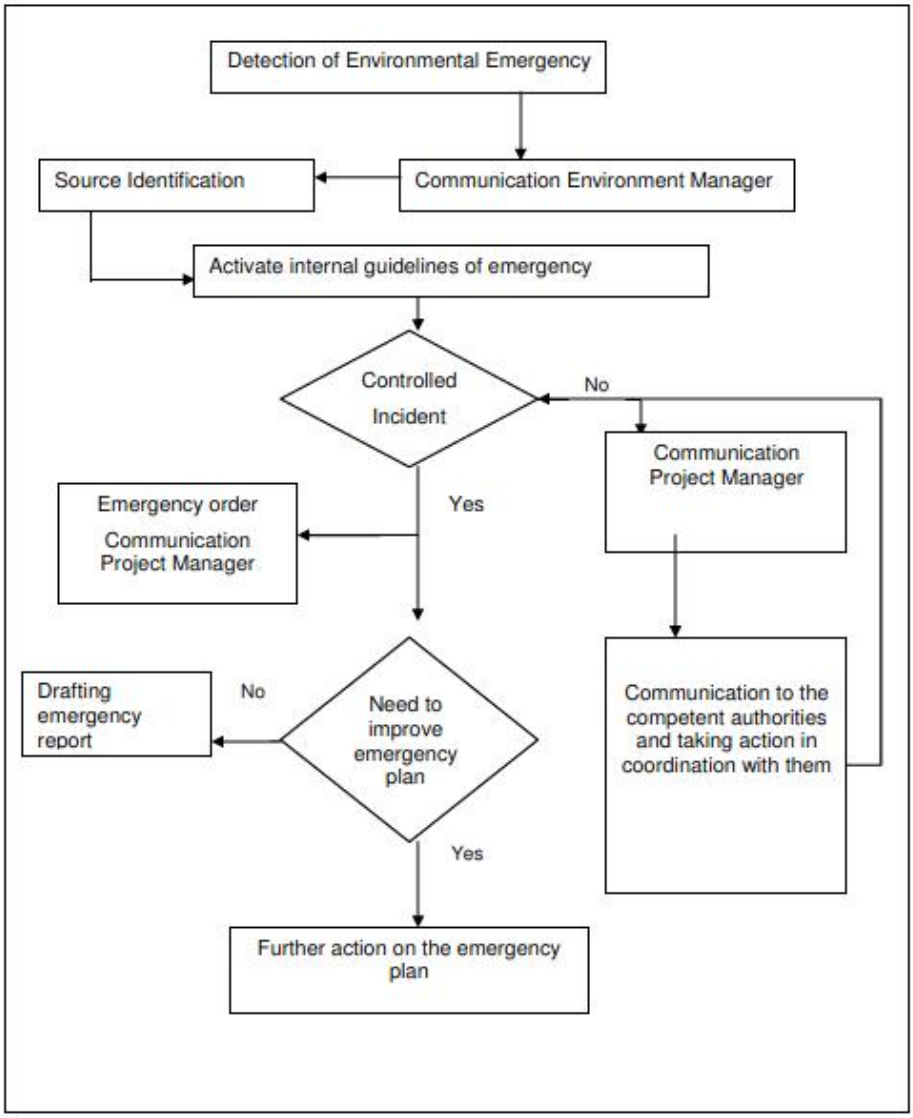

Different types of accidents can occur:

Incident Type	Examples	Incident Classification		
		Level I - Minor	**Level II - Significant**	**Level III - Major**
Accidental discharges/ Spills	Oil (lubricant, transformer or hydraulic)	**Amount < 25 liters**	**25 ≥ Amount ≤ 100 liters**	**Amount > 100 liters**
	Fuel (diesel and gasoline)			
	Hazardous Chemicals (acids, paints, solvents, etc.)	No risk of contamination of sensitive areas and/or groundwater	High Risk of contamination of sensitive areas and/or groundwater	Contamination to sensitive areas and/or groundwater
	Raw Sewage / Slurry			
Fire/Smoke	Open Burning	Local aesthetic and equipment damage	Site aesthetic and equipment damage	Public aesthetic and equipment damage
	Chemical Reactions			
	Explosions			
Response Time		**Within 24 hours**	**Immediately**	**Immediately**

Accidental discharges/Spills:

Once identified the source of the leak, it will be stopped with available means and it will be prevented the product reaches the water course.

All ignitions sources, in particular the lighting of lighters or matches and sparks, will be deleted in the vicinity of the spill.

Within fifteen minutes, spill will be collected using absorbent material and also trying to remove the top ten centimeters of soil layer next to the spill despite of apparently not have been affected by it.

Subsequently inserted into plastic bag, proceeding to packaging, storage and labeling in the waste recycling point for further management as hazardous waste by the case authorized manager. If the spill has reached the network sewers or public waterways, it will be immediately communicated to the competent authority.

Fire:

- Fire outbreak: it can be controlled quickly and easily by the staff of the area with the portable extinguishers that will be located in every work area.

- Fire: is regarded as any uncontrolled fire that exceeds the capacity of site staff intervention.

  In early stages, portable extinguishers shall be used, avoiding as far as possible the fire from reaching flammable materials that increase their danger. Given the unfavorable trend of attempts or the sudden discovery of a fire, whose intensity exceeds the possible action of site personnel and the impossibility or personal risk in their control, the action recommended in this case, will simply fire containment -isolation of fuel, closing of doors and windows_ in order to avoid the propagation. Fire-fighters Service will be notified. All staff will be available to the fire-fighters just in case they need help.

Burned materials shall be deposited in proper containers, depending on their nature.

7 ROLES AND RESPONSIBILITIES

This document is established and maintained by QA/QC&E Manager and distributed to all site teams Manager & Engineer, Supervisors, Environmental Engineer, Foremen etc.) for correct application and implementation.

The Project Manager is responsible for approval and correct application of the MS. The QA/QC&E Manager monitors the implementation of the MS and is in charge to take necessary corrective actions.

7.1 RESPONSIBILITIES

Project Manager

- Project Manager is responsible for the complete direction of the project and has the overall responsibility of the Project Quality. Project Manager will ensure that the project is completed to Employer satisfaction, consistent with all quality, safety, schedule, and other contractual requirements.
- PM will provide evidence of this commitment to the development and implementation of the quality and environmental management system and continually improving its effectiveness by: Communicating to the organization the importance of meeting client´s as well as statutory and regulatory requirements.
- Managing the Construction Progress Meeting with the Client (if any)
- Establish the Quality and Environmental Policy.
- Appointment of Management Representative.
- Establish Training Plan / Matrix
- Establish Organization Chart
- Establish Roles, responsibilities and authorities
- Identify authorities for approval of documents
- Establish Document Numbering Requirements
- Pre-commissioning, commissioning and start-up
- Take-over

Construction Director

- Construction Director is responsible for organizing, supervising, and directing project construction activities to successfully meet project specifications and schedules at the jobsite. Construction Director authorizes the site construction schedule and site construction procedures to ensure good workmanship, safe construction, and on-schedule performance.
- Identify, develop and implement procedures for any special processes.
- Criteria for the selection of suppliers and subcontracts.
- Control of the Procurement activities to be carried out by Procurement Manager.
- Establishing and Control of the Time Schedule to be developed by Planning Manager.
- Control of the interface activities to be carried out by the Interface Manager.
- Corrective Action
- Preventive Action
- Pre-commissioning, commissioning and start-up
- Handover
- Final Turnover Certification

QA/QC&E Manager

- QA/Q&EC Manager is responsible to Project Manager for establishing project´s specific Quality and Environmental System and closely monitoring implementation of it. He is to organize and / or perform the training of Project Personnel to ensure that this Project Quality Plan is understood in all levels of the Project Organization.
- Conduct Management Reviews
- Organization QA/QC&E Department organization, duties, disciplines.
- Define structure of QMS in Project QA Plan
- Identify, develop and implement QA / QC & E procedures
- Identify, develop and implement Inspection & Test Plans
- Establish and Maintain Document / Correspondence control procedure.
- Corrective Action
- Preventive Action
- Inspection Planning
- Identification of Inspection Requirements.
- Allocation of resources
- Notification of inspection readiness
- Computerized tracking system for Inspection & Test results and status
- Pre-commissioning, commissioning and start-up

Deputy QA&E Manager

- Deputy QC Manager replaces the QA/QC&E Manager in his absence
- Report to QA/QC&E Manager on QA and Environmental activities
- Conduct QA&E Management Reviews
- Organization QA&E Department organization, duties, disciplines.
- Identify, develop and implement QC/QA&E procedures
- Identify, develop and implement Environmental Inspections
- Identification of Environmental Requirements.

Environmental Engineer

- Correct implementation of environmental issues
- Report to Deputy QA&E Manager about these activities
- Environmental training at site

Emergency & Disaster Supervisor

- Determine the Non-conformities and analyze, provide solutions and correct them.
- Identify potential emergency situations that may occur at different stages of the project.
- In environmental emergencies, intervene to mitigate the effects and monitor follow-up situations created.
- Acting on environmental emergencies, and keep track of those produced.
- Establish and communicate the environmental emergency plans.
- Analyze after any environmental emergency, the measures contained in the environmental emergency plan.
- Carry out periodic reviews of the emergency plan.
- Organize and analyze simulations if necessary.
- Collaborate with internal audits.

Subcontractor

- Correct application of MS in accordance with Environmental and Quality Requirements and Conditions of Contract,
- Monitoring execution work activities in respect to work schedule,
- Responsible to keep of records consistent with Environmental and Quality Requirements.
- Responsible to provide logistic support for site workforce,
- Responsible to take HSE measures at construction sites.
- Assigning appropriate financial and manpower resources,
- Procurement agreements with the Suppliers of the constituents,
- Coordination with external experts,
- Coordination with the Contractor,
- Attend monthly meetings with the Contractor,

Appendix H

Erosion Management Plan

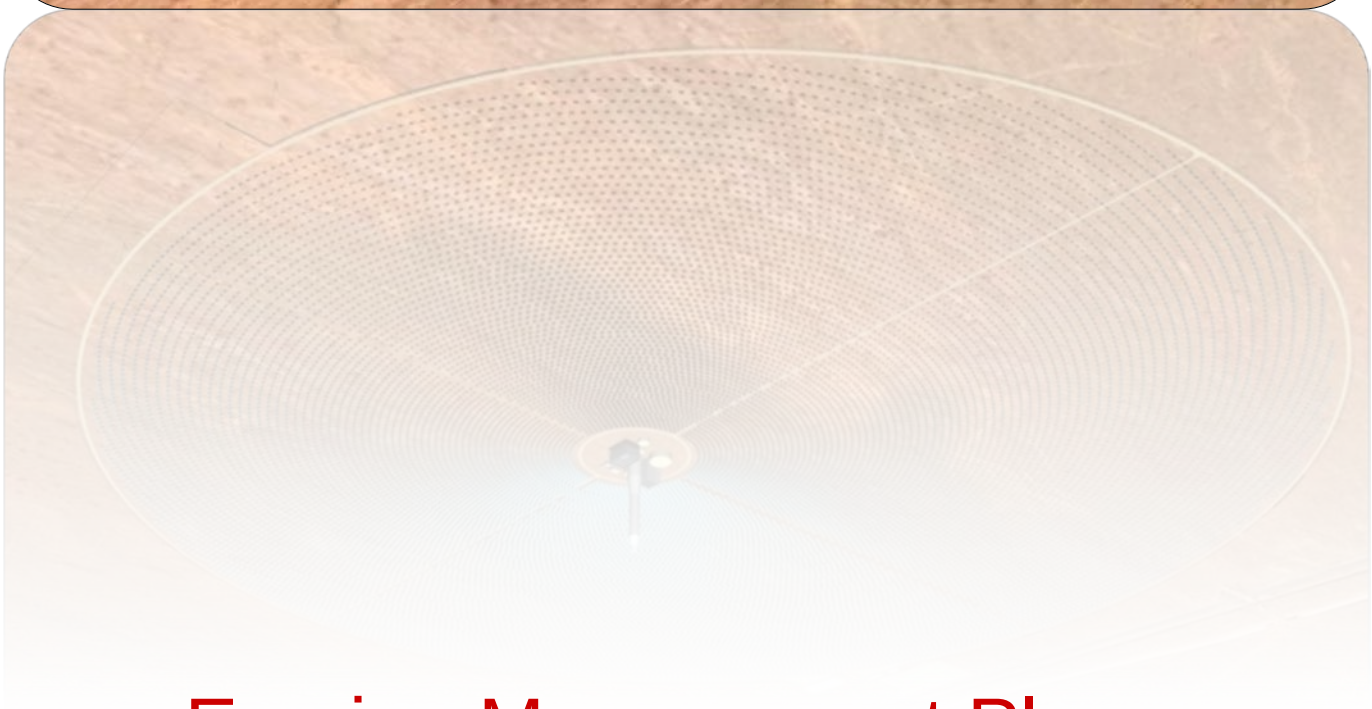

Erosion Management Plan

ACWA POWER SOLARRESERVE REDSTONE SOLAR THERMAL POWER PLANT

SolarReserve South Africa
December 2, 2015

SOIL MANAGEMENT PLAN

PRINCIPLES FOR EROSION MANAGEMENT

1. PURPOSE

Exposed and unprotected soils are the main cause of erosion in most situations. Therefore, this erosion management plan and the revegetation and rehabilitation plan are closely linked to one another and should not operate independently, but should rather be seen as complementary activities within the broader environmental management of the site and should therefore be managed together.

The principles for erosion management address the management and mitigation of potential impacts relating to soil erosion. The objective of the plan is to provide:

- A general framework for soil erosion and sediment control, which enables the contractor to identify areas where erosion can occur and is likely to be accelerated by construction related activities.
- An outline of general methods to monitor, manage and rehabilitate erosion prone areas, ensuring that all erosion resulting from all phases of the development is addressed.

Detailed Method Statements must be developed for erosion management scenarios and include details on the system/mechanism preferred to treat the erosion concern; the design and implementation mechanism and timeline for the appropriate system/mechanism; and details regarding the need for monitoring the area to ensure that the implemented erosion control system functions.

2. RELEVANT ASPECTS OF THE SITE

Sections of the development area comprise very fine sandy and dispersive soils which in most cases already contained levels of erosion varying between low to moderate. The removal of vegetation and the disturbance of soil will render these areas prone to further erosion or the forming of new erosion areas.

Also prone to erosion are the soils occurring around the exposed rock beds as surface water flow accelerates over the hard, impenetrable surfaces and scouring the soils surrounding these areas where sufficient roughage (vegetation) is absent.

3. EROSION AND SEDIMENT CONTROL PRINCIPLES

The goals of erosion control during and after construction at the site should be to:

» Protect the land surface from erosion;

» Intercept and safely direct run-off water from undisturbed upslope areas through the site without allowing it to cause erosion within the site or become contaminated with sediment; and
» Progressively revegetate or stabilise disturbed areas.

These goals can be achieved by applying the management practices outlined in the following sections.

3.1 ON-SITE EROSION MANAGEMENT

General factors to consider regarding erosion risk at the site includes the following:

» Soil loss will be greater during wet periods than dry periods. Intense rainfall events outside of the wet season, such as occasional summer thunder storms can also cause significant soil loss. Therefore precautions to prevent erosion should be present throughout the year.
- Soils loss will be greater on steeper slopes. Ensure that slopes are not devegetated unnecessarily and subsequently become hydrophobic (i.e. have increased runoff and a decreased infiltration rate) increasing the erosion potential.
» Soil loss is related to the length of time that soils are exposed prior to rehabilitation or stabilisation. Therefore the gap between construction activities and rehabilitation should be minimised. Phased construction and progressive rehabilitation, where practically possible, are therefore important elements of the erosion control strategy.
» The extent of disturbance will influence the risk and consequences of erosion. Therefore site clearing should be restricted to areas required for construction purposes only. As far as possible, large areas should not be cleared all at once, especially in areas where the risk of erosion is higher.
» Roads should be planned and constructed in a manner which minimises their erosion potential. Roads should therefore follow the natural contour as far as possible. Roads parallel to the slope direction should be avoided as far as possible.
» Where necessary, new roads constructed should include water diversion structures present with energy dissipation features present to slow and disperse the water into the receiving area.
» Roads and other disturbed areas should be regularly monitored for erosion. Any erosion problems recorded should be rectified as soon as possible and monitored thereafter to ensure that they do not re-occur.
» Compacted areas should have adequate drainage systems to avoid pooling and surface flow. Heavy machinery should not compact those areas which are not intended to be compacted as this will result in compacted hydrophobic, water repellent soils which increase the erosion potential of the area. Where compaction does occur, the areas should be ripped.

- All bare areas should be revegetated with appropriate locally occurring species, to bind the soil and limit erosion potential.
- Silt fences should be used where there is a danger of topsoil or material stockpiles eroding and entering streams and other sensitive areas.
- Gabions and other stabilisation features should be used on steep slopes and other areas vulnerable to erosion to minimise erosion risk as far as possible.
- Activity at the site after large rainfall events when the soils are wet and erosion risk is increased should be reduced.
- Topsoil should be removed and stored separately during construction activities (as per the recommendations in the EMPr), and should be reapplied where appropriate as soon as possible in order to encourage and facilitate rapid regeneration of the natural vegetation on cleared areas.
- Regular monitoring of the site for erosion problems during construction (ongoing) and operation (at least twice annually) is recommended, particularly after large summer thunderstorms have been experienced. The ECO will determine the frequency of monitoring based on the severity of the impacts in the erosion prone areas.

4. EROSION CONTROL MECHANISMS

The contractor may use the following mechanisms (whichever proves more appropriate/ effective) to combat erosion when necessary:

- Reno mattresses;
- Slope attenuation;
- Hessian material;
- Shade catch nets;
- Gabion baskets;
- Silt fences;
- Storm water channels and catch pits;
- Soil bindings;
- Geofabrics;
- Hydro-seeding and/or re-vegetating;
- Mulching over cleared areas;
- Boulders and size varied rocks; and
- Tilling.

4.1 ENGINEERING SPECIFICATIONS

A detailed engineering specifications Stormwater Management Plan describing and illustrating the proposed stormwater control measures must be prepared by the Civil Engineers during the detailed design phase and should be based on the underlying

principles of the Stormwater Management Plan (Appendix G of the EMPr) and this should include erosion control measures. Requirements for project design include:

- Erosion control measures to be implemented before and during the construction period, including the final stormwater control measures (post construction).
- All temporary and permanent water management structures or stabilisation methods must be indicated within the Stormwater Management Plan.
- An onsite Engineer or Environmental Officer (EO) to be responsible for ensuring implementation of the erosion control measures on site during the construction period. The ECO to monitor the effectiveness of these measures on the interval agreed upon with the Site Manager and EO.
- The EPC Contractor holds ultimate responsibility for remedial action in the event that the approved Storm-Water Plan is not correctly or appropriately implemented and damage to the environment is caused.

4.2 MONITORING

The site must be monitored continuously during construction and operation in order to determine any indications of erosion. If any erosion features are recorded as a result of the activities on site the Environmental Officer (during construction) or Environmental Manager (during operation) must:

- Assess the significance of the situation.
- Take photographs of the soil degradation.
- Determine the cause of the soil erosion.
- Inform the contractor/operator that rehabilitation must take place and that the contractor/operator is to implement a rehabilitation method statement and management plan to be approved by the Site/Environmental Manager in conjunction with the ECO.
- Monitor that the contractor/operator is taking action to stop the erosion and assist them where needed.
- Report and monitor the progress of the rehabilitation weekly and record all the findings in a site register (during construction).
- All actions with regards to the incidents must be reported on a monthly compliance report which should be kept on file for if/when the Competent Authority requests to see it (during construction) and kept on file for consideration during the annual audits (during construction and operation).

The Contractor (in consultation with an appropriate specialist, e.g. an engineer) must:

- Select a system/mechanism to treat the erosion.

- Design and implement the appropriate system/mechanism
- Monitor the area to ensure that the system functions like it should. If the system fails, the method must be adapted or adjusted to ensure the accelerated erosion is controlled.
- Continue monitoring until the area has been stabilised.

5. CONCLUSION

The Erosion Management Plan is a document to assist the Proponent/ EPC Contractor with guidelines on how to manage erosion during all phases of the project. The implementation of management measures is not only good practice to ensure minimisation of degradation, but also necessary to ensure compliance with legislative requirements. This document forms part of the EMPr, and is required to be considered and adhered to during the design, construction, operation and decommissioning phases of the project (if and where applicable).

6. REFERENCES

Department of Environmental Affairs. (1983). *Conservation of Agricultural Resources Act 43 of 1983.* Pretoria: Department of Environmental Affairs.

Coetzee, K. (2005). *Caring for Natural Rangelands.* Scottsville: University of KwaZulu-Natal Press.

Commission, F. R. (2009, March 10). *Forestry Commission*. Retrieved August Tuesday, 2012, from Forestry Commission: Forest Research : www.forestry.gov.uk

Tongway, D. J., & Ludwig, J. A. (2004). *Heterogeneity in arid and semi arid lands.* Queensland: Sustainable Ecosystems.

van der Linde, M., & Feris, L. (2010). *Compendium of South African Legislation.* Pretoria: Pretoria University Press.

Appendix I

Soil Management Plan

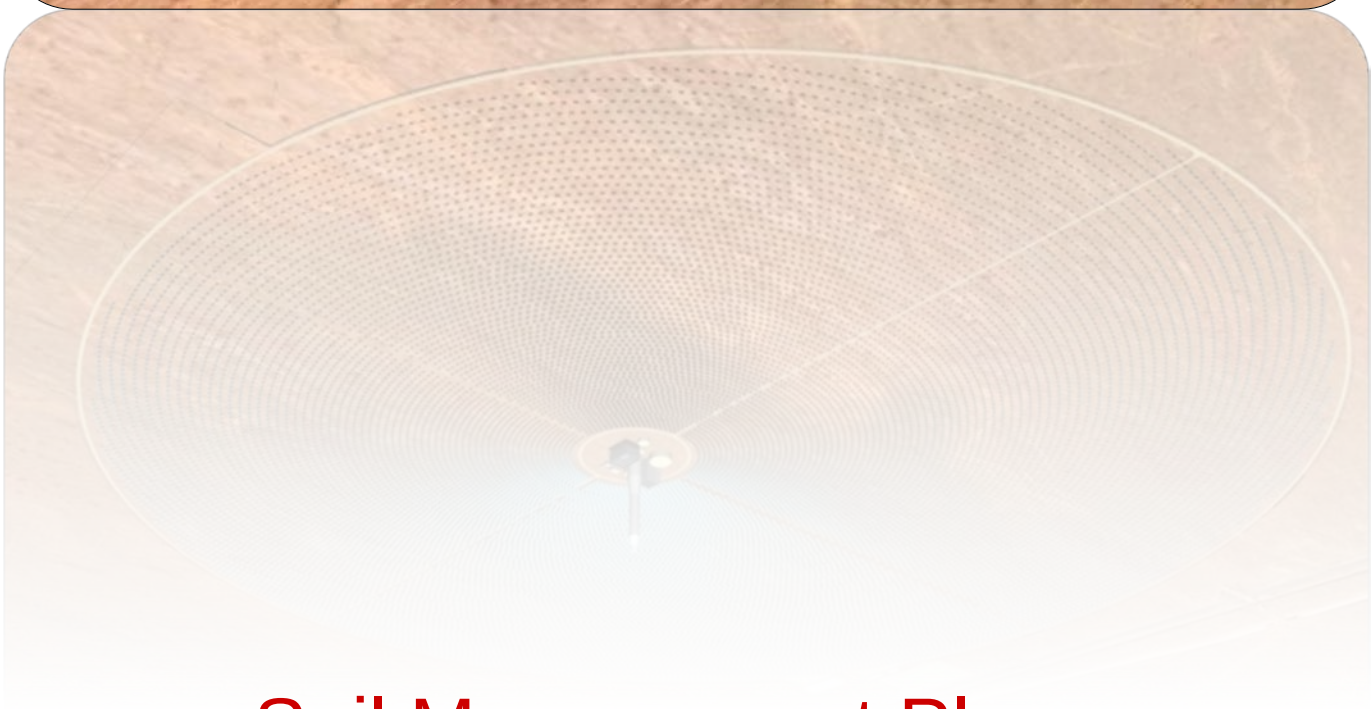

Soil Management Plan

ACWA POWER SOLARRESERVE REDSTONE SOLAR THERMAL POWER PLANT

SolarReserve South Africa
December 2, 2015

SOIL MANAGEMENT PLAN

PURPOSE

Some of the most significant impacts on soil properties occur as a result of activities associated with construction. Construction activity can have adverse impacts on soil in a number of ways by:

- Covering soil with impermeable materials, effectively sealing it and resulting in significant detrimental impacts on soils' physical, chemical and biological properties, including drainage characteristics.
- Contaminating soil as a result of accidental spillage or the use of chemicals.
- Over-compacting soil through the use of heavy machinery or the storage of construction materials.
- Reducing soil quality, for example by mixing topsoil with subsoil.
- Wasting soil by mixing it with construction waste or contaminated materials, which then have to be treated before reuse or even disposed of at landfill as a last resort.

Careful management of topsoil and subsoil is an important aspect of sustainable use of materials that are being stripped. Without a detailed Soil Resource Plan there is the risk of losing, damaging or contaminating valuable soil resources. The purpose of this Soil Management Plan is to outline principles for soil management to ensure the integrity of the resource during and post-construction. This plan should be read together with the Emergency Response Plan in order to minimise the risk of contamination of soils.

SOIL HORIZONS

Topsoil

The top-most soil layer (0-25 cm) in undisturbed areas. This soil layer is important as it contains nutrients, organic material, seeds, communities of micro-organisms, fungi and soil fauna. All the contents of the topsoil layer are necessary for soil processes such as nutrient cycling, and support growth of new plants. The biologically active upper layer of soil is fundamental in the development of soils and the sustainability of the entire ecosystem. Fungi, algae, cyanobacteria and non-vascular plants form a 'living crust' on the soil surface that influences the retention of resources (principally nutrients and water), as well as reducing the potential for soil erosion.

In general, the greatest concentration of seeds (i.e. up to 90% of the seedbank) is found in the top 5-10 cm of topsoil. Soil nutrients and other biological elements also have a higher concentration in the top 5 – 10 cm of soil, but can occur up to 25 cm.

Subsoil

Soil generally deeper than 25 cm. The subsoil contains lower levels of nutrients, but the soil texture is still suitable for plant growth.

Overburden

All the soil below the subsoil layer, generally characterised by a fine soil texture which is sometimes high in clay and salt content which makes plant growth difficult. Such soils comprise a sterile growth medium, devoid of nutrients, and depending on the clay content, are of high salinity and often phytotoxic. Even shallow-lying overburden soils are largely depleted of nutrients. These soils constitute an unsuitable medium for the establishment of plants.

PRINCIPLES FOR SOIL MANAGEMENT

1.1. The correct handling of topsoil

- Before beginning work on site, topsoil should be stripped from all areas that will be disturbed by construction activities. Appropriate equipment must be used and appropriate work practices must be implemented for soil stripping as mishandling soil can have an adverse effect on its properties.
- Topsoil should be stripped in dry conditions.
- Topsoil must be retained on site in order to be used in site rehabilitation. The correct handling of the topsoil layer is in most cases the key to rehabilitation success.
- It is important that the correct depth of topsoil is excavated in order to ensure good plant growth. If excavation is too shallow, then an important growth medium for new seedlings could be lost. If excavation is too deep, this could lead to the dilution of the seed and nutrient rich topsoil with deeper sterile soil.
- Topsoil and subsoil layers must never be mixed. The mixture of topsoil with the deeper sterile soil hinders the germination of seeds which are buried too deep in the soil layer. Mixture of soil layers also leads to the dilution of nutrient levels which are at highest concentration within the topsoil, resulting in lower levels of nutrients available for new seedlings.
- To enable soil to be reused on site at a later stage, it needs to be stored in temporary stockpiles to minimise any damage or loss of function. Stockpiles should not be higher than 2m. Alternatively topsoil berms can be created on the site boundaries. There are a number of important considerations when creating stockpiles - including soil erosion, pollution to watercourses and the risk of flooding. These will be affected by the size, height and method of forming stockpiles, and how they are protected and maintained.
- Topsoil must stored separately from other soil in heaps until construction in an area is complete.

- The duration of topsoil storage should be minimsed as far as possible. Storing topsoil for long periods leads to seed bank depletion following germination during storage, and anoxic conditions develop inside large stockpile heaps.
- All stockpiles must be positioned away from drainage lines.
- Sediment fencing should be erected downslope of all stockpiles to intercept any sediment and upslope runoff should be diverted away from stockpiles.

1.2. Stripping of Subsoil

The following protocols must be followed when stripping subsoil:

- On many sites subsoil will not need to be stripped but merely protected from damage. However, on other sites it might need to be temporarily removed. Where subsoil is required to be stripped, this should be undertaken before commencement of construction from all areas that are to be disturbed by construction activities or driven over by vehicles.
- Subsoil stripping depths depend on the correct identification of the sub-soil types on an ad-hoc basis, where no formal survey data exists.
- Subsoil should be stripped in the driest condition possible.
- To enable soil to be reused on site at a later stage, it needs to be stored in temporary stockpiles to minimise any damage or loss of function. There are a number of important considerations when creating stockpiles - including soil erosion, pollution to watercourses and the risk of flooding. These will be affected by the size, height and method of forming stockpiles, and how they are protected and maintained.
- All stockpiles must be positioned away from drainage lines.
- Sediment fencing should be erected downslope of all stockpiles to intercept any sediment and upslope runoff should be diverted away from stockpiles.

Appendix J

IFC Workers Accommodation Standards

Workers' accommodation: processes and standards

A guidance note by IFC and the EBRD

The EBRD is an international financial institution that supports projects from central Europe to central Asia. Investing primarily in private sector clients whose needs cannot be fully met by the market, we foster transition towards open and democratic market economies. In all our operations we follow the highest standards of corporate governance and sustainable development.

IFC, a member of the World Bank Group, creates opportunity for people to escape poverty and improve their lives. We foster sustainable economic growth in developing countries by supporting private sector development, mobilising private capital, and providing advisory and risk mitigation services to businesses and governments. Our new investments totalled US$ 15 billion in fiscal 2009, helping play a prominent role in addressing the financial crisis. For more information, visit www.ifc.org.

About this guidance note

This Guidance Note is aimed at providing practical guidance to IFC and EBRD specialists, consultants and clients on the processes and standards that should be applied to the provision of workers' accommodation in relation to projects funded by IFC or the EBRD. Applying appropriate standards to the construction and operation of worker housing falls within the performance requirements on labour and working conditions expected of clients by both institutions. The Guidance Note also provides examples of good practice approaches that businesses have successfully applied in their operations. IFC and the EBRD have not financed all the projects or companies mentioned in the Note. Some of the information in the Note originates from publicly available sources such as company web sites. IFC and the EBRD have not verified the accuracy of such information nor the companies' practices. This Guidance Note is not intended to establish policy itself; and any issues arising in an IFC- or EBRD-financed project will be assessed and addressed in the context of the particular circumstances of that project. The EBRD and IFC recognise that there are no comprehensive international regulations relating to workers' accommodation, and that good and best practices are constantly evolving. The EBRD and IFC intend to update this Guidance Note to reflect such developments, and would welcome feedback and comments from users to contribute to this process. Comments should be sent to environmentalandsocial@ebrd.com and asksustainability@ifc.org

Contents

Workers' accommodation: processes and standards

Public guidance note by IFC and the EBRD

EXECUTIVE SUMMARY

This guidance note addresses the processes and standards that should be applied to the provision of workers' accommodation in relation to projects funded by the EBRD or IFC. Applying appropriate standards to the construction and operation of worker housing falls within the performance requirements on labour issues expected of clients by both organisations.

There is a range of different types of workers' accommodation that may be required by various projects and at different stages within projects, including temporary exploration camps, construction camps and permanent dormitories. Specific issues arise in relation to each of these. This note reviews various international, national, private sector and public sector standards and guidance that are more generally applicable. In some cases clear standards or good practice have been identified. In others, we present a range of standards that provide some flexibility and adaptability within the local context. In these cases, compliance with at least the minimum standard is expected.

Issues for consideration are organised in terms of a staged process to be undertaken in planning, constructing and then operating worker housing facilities. These issues may be relevant to the direct client or to (sub)contractors undertaking particular elements of a project, such as construction or management of facilities. In cases where contractors are used, it is important to set up appropriate mechanisms and processes (reporting/monitoring) to ensure that performance requirements are complied with.

At the initial stage of any project, there is a need to assess whether accommodation for workers is required, and if so, whether this can be provided within existing local communities or whether new facilities should be constructed. The likely impact on local communities and the housing market of either option should be assessed.

Before constructing any facilities, other potential impacts should be evaluated. These may include the impact of construction, and the effect of a new housed labour force on community services, such as health, and on community cohesion and safety. These assessments should form part of a project's Environmental and Social Impact Assessment.

The next step is to consider the standards to be applied for the location, arrangement and construction of any facilities. Issues here include consideration of a safe and healthy location, application of appropriate construction standards, provision of adequate and sanitary living conditions and provision of appropriate leisure and health facilities.

There are no universally applicable international regulations relating to workers' accommodation standards in general. However, there are some international standards/guidance on food safety, water sanitation and waste management that should be applied, and national or local building regulations that must be complied with.

Lastly, when the accommodation has been completed, there are issues around its operation and management. These include the type of staff who will manage it, development of appropriate management policies, such as security and grievance procedures, and ongoing liaison with local communities. All such policies should be subject to regular review.

INTRODUCTION

This guidance note looks at the provision of housing or accommodation for workers by employers and the issues that arise from the planning, construction and management of such facilities.

Generally, workers are housed by their employers in cases where, either the number or the type of workers required cannot be sourced from or accommodated within local communities. Thus provision of workers' accommodation is often associated with the importation of an external workforce into an area. This can occur because the local labour supply or skills base is inadequate, because the workers are simply not available due to the remote location of the worksite or the particular skills required or because labour requirements can only be satisfied by migrant workers due to the nature of the work or the working conditions.

Provision of worker housing may relate to a temporary phase of a project (for example an exploration or construction camp) or may be more permanent (for example a factory dormitory or plantation camp). Depending on the type of accommodation, there are a range of considerations relating to both the living conditions of the workers themselves, and to the impact that workers' housing facilities may have on surrounding communities. The provision of workers' accommodation is a frequent component of large-scale projects funded by institutions such as the EBRD or IFC.

This note is aimed at providing practical guidance to IFC and EBRD specialists, consultants and clients on appropriate policies and standards relating to workers' accommodation. Both the EBRD and IFC apply environmental and social performance standards in relation to their investments that include provisions on labour and working conditions. The EBRD has included a specific provision in its *Environmental and Social Policy* addressing workers' accommodation; paragraph 16 of *Performance Requirement 2* (PR2) stipulates:

> *Where a client provides accommodation for workers, the accommodation shall be appropriate for its location and be clean, safe and, at a minimum, meet the basic needs of workers. In particular, the provision of accommodation shall meet national legislation and international good practice in relation, but not restricted, to the following: the practice for charging for accommodation; the provision of minimum amounts of space for each worker; provision of sanitary, laundry and cooking facilities and potable water; the location of accommodation in relation to the workplace; any health, fire safety or other hazards or disturbances and local facilities; the provision of first aid and medical facilities; and heating and ventilation. Workers' freedom of movement to and from the employer-provided accommodation shall not be unduly restricted.*

IFC *Performance Standard 2* (PS2) aims to promote "safe and healthy working conditions, and to protect and promote the health of workers." Arguably this covers living conditions as well when these are the responsibility of employers. *IFC Guidance Note 2 on Labour and Working Conditions* specifically mentions the potential danger of forced labour when housing is provided to workers in lieu of payment or where inappropriate charges for housing are levied.

In some instances, for example during construction phases of projects, workers will not be directly engaged by the EBRD's or IFC's clients, but by (sub)contractors. However, both the EBRD and IFC require their clients to ensure that non-employee

Box 1 - Construction camp built and operated by a Chinese contractor

This example illustrates the different mechanisms and processes which can be set up in order to ensure that workers' accommodation standards are being implemented by contractors.

Antea, a Greek client of the EBRD and IFC, and a subsidiary of Titan Cement Co, has contracted out the construction of a cement factory in Albania to a Chinese contractor. The construction involves bringing in 700 migrant workers and housing them in workers' accommodation. As part of the contract with the construction company, Antea has included a Code of Conduct and specific language referring to compliance with national labour law, ILO conventions and IFC PS2 and has developed a supervision and monitoring plan (including safety and labour audits) to ensure the construction company is in compliance with all requirements stated in PS2, that living conditions in particular comply with the guidance provided by the EBRD/IFC and that all conditions enhance a safe and good working and living environment. Safety training courses and integration of best practices in accident prevention have been instigated, while solid waste and wastewater generated in the camp is managed in accordance with Albanian regulations and IFC/EBRD guidelines.

workers, engaged by contractors or other intermediaries to work on a project site to perform work related to the core function of the project, are covered by most of the provisions within PS2 and PR2, including (in the EBRD's case) paragraph 16 on workers' accommodation. To this end, clients should set up mechanisms and processes to ensure that contractors and other intermediaries comply with the EBRD's/IFC's standards. This should involve including contractual covenants related to workers' accommodation standards, reviewing contractor agreements, implementing reporting mechanisms and monitoring the implementation of workers' accommodation standards.

A process approach

There are several stages to the process of addressing issues raised by workers' accommodation. These are:

- assessing whether housing is needed for the project and if so, what sort
- assessing impacts on local communities and planning mitigation of potential negative impacts
- awareness of the national and local regulatory framework
- determining the standards to apply to the location of facilities, the construction of housing and provision of facilities
- managing accommodation.

There are no comprehensive international regulations relating to workers' accommodation. However, there are legal and regulatory instruments and guidance that relate to particular aspects of the provision of worker housing.[1] This guidance note is based on a review of these instruments and legislation, as well as guidelines and best practices produced by a range of different private and public sector actions at national and international level. As such, the processes and standards cited often represent a range of acceptable practice. Those correspond to the Benchmark paragraphs under each section. The particular standard to be applied will depend on criteria such as the type of project, location, climate and length of project. In all cases at least the minimum standard included in a given range should be applied. However, depending on the particular circumstances the minimum standard may not always be acceptable, in which case the EBRD/IFC will agree an appropriate higher standard with the client, based on the environmental and social due diligence.

Figure 1: Workers' accommodation, assessment and management process

Need assessment	Is there a need for workers' accommodation?	▸ Assess the availability of the local workforce ▸ Assess the availability of existing housing
Impact assessment	What are the expected impacts (positive and negative) on the communities?	▸ Determine specific impacts of the workers' accommodation construction phase (including security and involuntary resettlement) ▸ Assess existing community infrastructures, services and facilities ▸ Understand the local business and employment context ▸ Give special attention to community health and safety issues and social cohesion ▸ Think about the consequences of dismantling and reinstatement
Construction	Which accommodation standards are needed?	▸ Identify and review the international, national, regional and sectoral regulations which address workers' accommodation ▸ Apply mandatory provisions and use non-binding provisions as guidance ▸ Apply at least the minimum requirements set out in this guidance note
Management	What management systems are required?	▸ Design management plans covering health and safety, security, workers' and communities' rights ▸ Appoint the right staff or contract the right companies ▸ Implement management plans ▸ Set up complaint/grievance and conflict resolution mechanisms (for both workers and communities) ▸ Review policies

1. See footnotes under Part I, introductory remark

PART I: PLANNING AND ASSESSING REQUIREMENTS FOR WORKERS' ACCOMMODATION

In considering worker housing, it is important to first be aware of the international, national and local regulatory framework. At a general level, several international instruments recognise a right to an adequate standard of housing for everyone or for specific categories of the population as part of respecting human rights.[2] To ensure the full realisation of this right, binding instruments generally require the State to take appropriate steps and measures. For workers, the recognition of such a right has been included in ILO Conventions and Recommendations for both Plantations and for Safety and Health in Agriculture, and in the ILO Recommendation 115 on Workers' Housing (1961) in particular. Although the latter is a non-binding recommendation providing guidance on policy, legislation and practice to the State and to the national authorities in charge of housing in particular, it offers useful guidance on what is expected from employers who provide housing to their employees, and it specifies a number of housing standards (See Box 2).

Box 2 - ILO Workers' Housing Recommendation 115

- It is generally not desirable for employers to provide housing for their workers directly and employers should use alternatives where possible. If there are no alternatives, specific attention should be paid to renting arrangements, workers' rights and housing standards. In addition, the possibility of worker-occupants acquiring, for a fair price, ownership of housing provided by the employer should also be examined.
- Renting arrangements should be fair. Adequate and decent housing should not cost the worker more than a reasonable proportion of their income and should never include a speculative profit.
- The employer should be entitled to repossess the accommodation within a reasonable time in the event of termination of the worker's contract of employment and the worker should be entitled to a reasonable period of continued occupancy and/or fair compensation when he ceases to exercise his employment.
- During the time workers spend in the workers' accommodation they should enjoy their fundamental human rights and freedom of association in particular. Workers' accommodation arrangements should not restrict workers' rights and freedoms.
- Housing standards should include special attention to the following:
  - minimum space allocated per person or per family (floor area; cubic volume; or size and number of rooms)
  - supply of safe water in the workers' dwelling in such quantities as to provide for all personal and household uses
  - adequate sewage and garbage disposal systems
  - appropriate protection against heat, cold, damp, noise, fire, and disease-carrying animals, and, in particular, insects
  - adequate sanitary and washing facilities, ventilation, cooking and storage facilities and natural and artificial lighting
  - a minimum degree of privacy both between individual persons within the household and for the members of the household against undue disturbance by external factors
  - the suitable separation of rooms devoted to living purposes from quarters for animals.
- Where accommodations are provided for single workers or workers separated from their families, additional housing standards should be considered:
  - a separate bed for each worker
  - separate gender accommodation
  - adequate sanitary conveniences
  - common dining rooms, canteens, rest and recreation rooms and health facilities, where not otherwise available in the community.

2. See for example
1948 Universal Declaration of Human Rights (Article 25)
1965 Convention on the elimination of all forms of racial discrimination (Article 5)
1966 International Covenant on Economic, Social and Cultural Rights (Article 11.1)
1979 Convention on the elimination of all forms of discrimination against women (Article 14.2)

At a national or regional level, regulations tend to contain only general provisions requiring employers to provide a decent standard of accommodation to workers. However, in some jurisdictions there are detailed regulations or standards setting out a comprehensive framework to be applied.[3] There may also be building regulations relating to issues such as sanitation, safety or building materials that must be adhered to. Therefore, national regulations and standards are the first place to look when determining the necessary standards for living facilities. However, responsibility for planning and building standards may well lie with regional or local levels of government, so it is important that these local authorities are consulted. Provisions on workers' accommodation can also be found in policy, guidelines or codes of practice adopted by a wide variety of actors such as international bodies, industry associations, national, regional or local authorities.[4] Compliance with national and local law is the basic and essential requirement.

Benchmarks

1. The international/national/local regulatory frameworks on workers' accommodation have been reviewed.

2. Identified mandatory provisions on workers' accommodation are implemented thoroughly.

I. Assessing the need for workers' accommodation

Before building and running workers' accommodation, it is important to understand the local housing and labour markets and the potential effects the building of new facilities may have on the surrounding communities.

A. Availability of workforce

At the initial scoping phase of a project, it is important to consider whether workers' accommodation is needed at all. In this respect, it is worth analysing the project's workforce requirements including skills and likely numbers over the project cycle and to assess the capacity of the local population to meet those workforce requirements either from its current base or as a result of training. It is preferable to source labour from the local communities as this has many advantages; not only in terms of reducing the need for workers' accommodation, but also as it will increase the direct and indirect benefits to the community arising from the project. This approach is strongly supported by the EBRD and IFC. Any national/local requirements to promote local employment opportunities must also be taken into account. It should be noted that even in the absence of such requirements, new recruitment on EBRD/IFC-financed projects must not be discriminatory.

Benchmarks

1. There has been an assessment of workers' availability in the neighbouring communities.

2. There has been an assessment of the skills and competencies of the local workforce and how those skills and competencies fit the project needs.

3. There has been an assessment of opportunities to train the local workforce to fulfil the project's needs.

B. Availability of existing housing

If local workers are unavailable or not sufficiently skilled, the question arises of whether external workers can be accommodated within the existing local housing capacity or whether new facilities are needed. In general, the decision to utilise host-community accommodation or to develop on-site accommodation will be based on factors such as whether project development is occurring near to larger, established population centres and on the capacity of any nearby communities, quality of housing stock and the capacity of the environment to assimilate a new workforce.

If existing capacity is available, in the form, for example, of lodging with local families, hotels, hostels or rented housing, the impact on the local communities and housing market should be assessed. Such off-site housing may create a wide range of economic opportunities such as rental income for local people or development of local businesses (shops and restaurants for instance), which are positive project impacts, and may also result in improvements to existing housing stock. However, off-site housing may also be associated with a range of adverse social impacts including increased demands on infrastructure, services and utilities, development of illicit trade activities (drugs, prostitution, selling of stolen goods) and inflation in local rent and other subsistence items with detrimental

3. See for example:
United States - Occupational Health and Safety Act (Standards 29, paragraph 1910.142)
Brazil - Health and safety regulation in the agricultural, livestock farming, forestry and aquaculture sectors, 2005
Malaysia - Workers' minimum standards of housing and amenities Act, 1990
South Africa - Basic condition of employment Act, 1997
New South Wales, Australia - Rural Workers Accommodation Act, 1969
Western Australia - Construction camp regulations, 1970
Dubai Municipality - Labour camp specifications (last updated in 2007)

4. See for example:
New South Wales, Australia - Accommodation for rural agricultural work, code of practice, 2006
Singapore - Code of practice on environmental health, 2005
Israel - Guide for Migrant Workers, Housing
ILO - Code of Practice, safety and health in forestry work, 1998
City of Geraldton-Greenough, Western Australia, Local planning policy - Temporary accommodation camps, 2006
Sustainable Agriculture Network Standards, 5.14, 2009.

consequences for the local population. If a project anticipates that the workforce is to be resident within the local communities it is good practice to provide financing options for local residents to develop and/or improve hostels for instance.

Conversely, to provide on-site housing opportunities minimises workforce-host community interactions and reduces the pressure on existing infrastructures and can also pre-empt the development of various external activities such as prostitution.

In some cases, it may be feasible and beneficial to offer workers or certain categories of workers an option between self-accommodation and company-provided accommodation with varying compensation accordingly.

To avoid or mitigate the most negative impacts, it is important to conduct a comprehensive assessment of the housing market and the likely impact of the various options for workers' accommodation. For larger projects, this assessment will best be done at the stage of the Environmental and Social Impact Assessment (ESIA). Measures resulting from this assessment will need to be incorporated in tendering and contracting documentation. Furthermore, in cases where local facilities are utilised, potential mitigation measures for adverse impacts such as increased inflationary rates on local costs must be assessed in the ESIA, and procedures that will be implemented to monitor this must also be presented.

Benchmarks

1. Prior to building any workers' accommodation, a comprehensive assessment of the local housing market has been conducted and the different types of housing available in the surrounding communities have been identified. For larger projects this assessment has been conducted at the stage of the project's Environmental and Social Impact Assessment.

2. There has been an assessment on communities of the impact of using existing housing opportunities.

3. Measures to mitigate adverse impacts on the local housing market have been identified and included in the Environmental and Social Action Plan (ESAP) or other relevant action plan.

II. Assessing impacts of workers' accommodation on communities

Where the need to provide new workers' accommodation is identified, it is important to consider how this will impact on the surrounding communities. This may be relevant both to the construction phase of the camp (or other accommodation) and during its operation. Risk identification and assessments specific to the workers' accommodation should be undertaken as part of the Environmental and Social Impact Assessment and any related development of an Environmental and Social Action Plan. This assessment can also be used to determine whether contact between non-local workforce and local communities should be encouraged or minimised.

Box 3 - Singapore National Environment Agency - Code of Practice on Environmental Health, 2005

The following guidelines shall be used for stand-alone dormitories.

- If the dormitory does not provide a separate space for cupboards/locker rooms, the minimum room space shall be 4 square metres per person (assuming a height of 2.4m).
- If the dormitory provides a separate space for cupboards/locker rooms, the minimum room space shall be 3 square metres per person (assuming a height of 2.4m).
- The room shall be adequately ventilated and lit.
- Adequate number of toilets and sanitary fittings shall be provided (1 toilet, 1 hand wash basin, 1 urinal and 1 bathroom with bench per 15 male workers).
- Where cooking area is to be provided in the dormitories, such provisions shall be in accordance with the requirements stipulated under Section 2.4 of the latest edition of Singapore Standard CP 102.

The above Singapore guidelines are mentioned as an example of "soft" regulations only. The standards described above may be inappropriate in different environments. Other standards apply in other countries.

A. Specific impacts during the construction phase

The construction of workers' accommodation and its potential impacts on communities should be managed in the same way as for construction of the project itself. Impacts need to be identified and may include health and safety, disturbance issues arising from construction, including traffic (dust, noise and vibration), and involuntary resettlement issues (including physical and economical displacement) when the erecting of workers' accommodation entails land acquisition.

B. Community infrastructure

Workers' influx in the vicinity of a community may strain existing infrastructure, in particular the water and sanitation, electricity and transport systems. Impacts of the worker facility should be avoided or mitigated, and included within the assessment of the overall project.

In general, where facilities are developed close to local communities it is important to provide adequate transport systems to preserve the right of workers' freedom of movement if they are not to become effectively "trapped". This should be balanced against the need to prevent any unecessary disruption of and/or to the local communities. Therefore it may be appropriate to limit worker movements, but any restriction should be clearly justified by the need to avoid the disruption of local communities, in particular local communities' transport infrastructures – and to provide maximum security and safety to both workers and communities (see PART II, Section E "Workers' rights, rules and regulations on workers' accommodation", below at page 21).

C. Community services and facilities

Depending on the size of the workers' accommodation, conditions of engagement (accompanied or unaccompanied) and the level of services offered to those workers, it may be necessary to assess the impact of workers on local medical, social, educational and recreational services and facilities, potentially to the detriment of nearby communities. It must be ensured that such services and facilities can meet increased demand. If not, services must be available to the workers on site.

D. Local businesses and local employment

Local businesses such as shops, restaurants or bars are likely to benefit from their proximity to workers' living facilities. However, there may also be negative issues that need to be managed such as increases in local prices, crime, prostitution or alcohol consumption (see below Part II, section E).

E. Community health and safety

The presence of a large number of workers, principally males, can give rise to an increased spread of communicable diseases such as HIV/AIDS in particular and other sexually transmitted diseases. In addition, special attention should be paid to risks such as road accidents, and other detrimental consequences of increased traffic generated by the project (dust, noise, and pollution). If the proposed project has major-accident hazards associated with it, emergency response and evacuation plans in accordance to PS4/PR4 will also need to be in place.

F. Community cohesion

The impact of the presence of workers with different lifestyles or cultural backgrounds on the host community needs to be assessed and managed, in particular issues such as religious or other cultural proscriptions, local traditions and community structure and the relationship between men and women.

G. Land acquisition and resettlement

Impacts and mitigation plans relating to land used for workers' accommodation facilities should be managed in the same way as for the project as a whole. As far as possible, land acquisition should be avoided or minimised.

H. Dismantling and reinstatement

Dismantling and reinstatement of workers' accommodation should be taken into account at the outset of the project in order to avoid any unnecessary lasting impacts of the accommodations on the communities (land use for instance). Where possible and appropriate, the facilities can be handed over to the communities.

Benchmarks

1. A community impact assessment has been carried out as part of the Environmental and Social Assessment of the overall project with a view to mitigate the negative impacts of the workers' accommodation on the surrounding communities and to enhance the positive ones.

2. The assessment includes potential health and safety impacts on the communities - including disturbances and safety issues caused by traffic (dust, noise, vibration, road accidents, disease) and consequences of land acquisition and involuntary resettlement occurring during the construction phase of the workers' accommodation.

3. Positive and negative impacts of workers' accommodation on community infrastructures, services and facilities have been included in the assessment, including specific attention to emergency responses and evacuation plans.

4. Impacts of workers' accommodation on community local businesses and local employment have been included in the assessment.

5. General impacts of workers' accommodation on the health of communities (notably the increased risk of road accidents and the increase of communicable diseases) and community social cohesion have been included in the assessment.

6. The assessment includes appropriate mitigation measures to address any adverse impacts identified.

Table 1: A typology of workers' accommodation

Category	Subcategory/examples	Common characteristics	Sectors covered	Key issues
Rural workers' accommodation	Logging camp Off-farm accommodation	Permanent or seasonal Remote	Forestry Agriculture	Worker access Monitoring difficulties
Plantation housing	Worker village Off-farm accommodation	Permanent and long term Families	Agriculture	Need to provide sustainable livelihoods Social infrastructures Living conditions
Construction camp	Worker camp Worker village Mobile worker camp	Temporary Migrant workers Gender separation	Extractives Utilities Infrastructure Manufacturing	Enforcement of standards and monitoring difficulties Relations with the communities Living standards Cost
Mine camp	Company towns Dormitories Integrated within existing communities Commuter (fly-in, fly-out)	Long term Remote location Gender separation	Extractives	Relations with communities Remoteness Living standards Worker access Long shifts No rest periods
Factory dormitory		Permanent Urban Internal migrants	Garments/textiles Manufacturing – toys, electronics	Space Privacy Living standards Deduction of excessive rent from wages

III. Types of workers' accommodation

There is a large variety of workers' living facilities. These may be classified in a number of ways. Table 1 provides one typology. Key criteria may include whether the facilities are temporary or permanent, their location (remote or non-remote), size, or economic sector (agriculture, mining, oil and gas, construction, manufacturing).

The typology above is given as an example only; other classifications are possible. For instance, housing may be categorised in terms of project phases for example, exploration (fly-in, fly-out camps), construction (temporary construction camp often with large proportion of migrant workers) and operational (permanent, dormitory, possible family accommodation).

Depending on the type of project, specific attention should be given to either providing single workers' accommodation or family accommodation. As a general rule, the more permanent the housing, the greater considerations should be given to enabling workers to live with their families. Such consideration is important where the workforce is

Box 4 - Best practice on home-ownership

When access to property schemes is proposed it is important to guarantee the sustainability of workers' investments. To this end, the location of the project and of the workers' accommodation and their integration in existing communities are factors to take into consideration. Caution should be exercised when offering such schemes in remote locations as it might be impossible to create a sustainable community and to develop non-project-related sources of livelihood.

Affordable housing in a sustainable town: A provider of affordable housing in South Africa and a provider of housing development for the mining sector worked together on a project to move away from mining hostels and rental villages to providing home-ownership opportunities to workers. To this end they developed a 400-plus unit in a village 20 km from the mine with the idea to create an economically and socially viable community close to the mine. A concern was to integrate people within existing communities with the necessary social amenities and infrastructures and to put the emphasis on better housing conditions, home ownership and affordable housing for mining workers. The success of the project relied on the ability for the service provider to take into account the often difficult financial situation of workers. To overcome over-indebtedness of workers, specific access to property schemes and programmes have been designed including employer support, economies of scale, low interest rate and stepped payment options.

Affordable housing in a self-sustaining community: An FMO (Netherlands Development Finance Company) client operating a mine in a remote location intends to manage and develop a well-planned, secure and independent village for approximately 1,000 employees. The FMO client is expected to provide residents with basic services, including water, electricity and sewerage as well as education, health services, sports facilities, shops, green areas and places of worship. In addition, provision has been made for a light industrial and small business area to support local business development. The long-term vision is for the Village to grow into a self-sustaining community of over 4,000 houses, which is capable of supporting a variety of small businesses and local enterprises. To support the long-term vision of a self-sustaining village and to provide mine employees with an opportunity to build up cash equity (in the form of a house), the FMO client will promote home ownership. In this context, an employee housing scheme has been designed that allows mine employees in all income categories to acquire title to property through mortgage debt all associated rights and obligations. Participation in the scheme is not a prerequisite for employment. The scheme includes several provisions to ensure affordability of home ownership to all mine employees and to protect employees against downside risks.

not sourced locally and in particular where migrant workers are used.[5] Provision for families will affect the other facilities necessary and the management of the accommodation. Best practice includes:

- To provide workers and their families individual family accommodation comprising bedrooms, sanitary and cooking facilities with an adequate level of privacy allowing families to have a normal family life.
- To provide nurseries, schools, clinics and recreational facilities for children, or to make sure that those services are readily available in the surrounding communities and of good quality.

Benchmarks

1. Consideration has been given to provision of family accommodation.

2. When arrangements for family accommodations are in place:
   - families are provided with individual accommodation comprising bedroom, sanitary and cooking facilities
   - adequate nursery/school facilities are provided
   - special attention is paid to providing adequate safety for children.

Additional issue

In projects located in rural and remote locations, issues around the question of how workers can travel to their communities/countries of origin might arise. Alternatively, the possibility to create a sustainable community and to bring in the workers' families might be considered.

Box 5 - Best practice on migrant workers' accommodation: Business in the Community - Voluntary Code of Practice on Employing Migrant Workers/Overseas Staff in Great Britain[6]

The Code, which is designed to guide and reinforce best practice in relation to the employment of migrant workers, points out that migrant workers will often have to travel long distances and be in need of accommodation when they take up a job. Consequently, the Code suggests the following.

- Employers should assist with travel costs incurred by migrant workers during the recruitment stage and the repayment of these costs should follow a clear process and the money paid back at an agreed affordable rate over a specified time period. The total amount repayable should be no more than that lent so that workers are not financially disadvantaged.
- Employers, where possible, should support migrant workers in finding suitable accommodation. Workers should not be required to stay in accommodation provided by the employer but should be free to choose their own if they wish to do so. Where employers do provide accommodation, they should ensure that they do not breach the rules relating to the apportionment of wages for payment for accommodation (the accommodation offset rules).
- Employers should help to ensure that, where workers obtain their own accommodation, they are not being exploited, and offer advice and help if requested.
- Employers should ensure that accommodation which is provided is not overcrowded and does not pose a risk to the health and safety of those living there, and that any agreed notice periods are observed.

5. On the increase in the recognition of workers' rights to family life, the ILO Migrant Workers Convention No 143 calls Member States to take all necessary measures which fall within its competence and collaborate with other Members to facilitate the reunion of the families of all migrant workers legally residing in its territory. In the same way, Art 44-2 of the International Convention on the Protection of the Rights of All Migrant Workers and Members of Their Families requires States Parties to take measures that they deem appropriate and that fall within their competence to facilitate the reunion of migrant workers with their spouses [...]as well as with their minor dependent unmarried children.

6. www.bitc.org.uk/resources/publications/migrant_workers_1.html

PART II: STANDARDS FOR AND MANAGEMENT OF WORKERS' ACCOMMODATION

I. Standards for workers' accommodation

This section looks at the principles and standards applicable to the location and construction of workers' accommodation, including the transport systems provided, the general living facilities, rooms/dormitories facilities, sanitary facilities, canteen and cooking facilities, food safety, medical facilities and leisure/social facilities.

A. National/local standards

The key standards that need to be taken into consideration, as a baseline, are those contained in national/local regulations. Although it is quite unusual to find regulations specifically covering workers' accommodation, there may well be general construction standards which will be relevant. These may include the following standards:

- Building construction: for example, quality of material, construction methods, resistance to earthquakes.
- Housing and public housing: in some countries regulations for housing and public housing contain requirements on issues such as the basic amenities, and standards of repair.
- General health, safety and security: requirements on health and safety are often an important part of building standards and might include provisions on occupation density, minimal air volumes, ventilation, the quality of the flooring (slip-resistant) or security against intrusion.
- Fire safety: requirements on fire safety are common and are likely to apply to housing facilities of any type. This can include provision on fire extinguishers, fire alarms, number and size of staircases and emergency exits, restrictions on the use of certain building materials.
- Electricity, plumbing, water and sanitation: national design and construction standards often include very detailed provisions on electricity or plumbing fixtures/fittings, water and sanitation connection/equipment.

Benchmark

1. The relevant national and local regulations have been identified and implemented.

B. General living facilities

Ensuring good standards in living facilities is important in order to avoid safety hazards and to protect workers from diseases and/or illness resulting from humidity, bad/stagnant water (or lack of water), cold, spread of fungus, proliferation of insects or rodents, as well as to maintain a good level of morale. The location of the facilities is important to prevent exposure to wind, fire, flood and other natural hazards. It is also important that workers' accommodation is unaffected by the environmental or operational impacts of the worksite (for example noise, emissions or dust) but is sufficiently close that workers do not have to spend undue amounts of time travelling from their accommodation to the worksite. Living facilities should be built using adequate materials and should always be kept in good repair, clean and free from rubbish and other refuse.

Benchmarks

1. Living facilities are located to avoid flooding and other natural hazards.

2. Where possible, living facilities are located within a reasonable distance from the worksite.

3. Transport from the living facilities to worksite is safe and free.

4. The living facilities are built with adequate materials, kept in good repair and kept clean and free from rubbish and other refuse.

Drainage

The presence of stagnant water is a factor of proliferation of potential disease vectors such as mosquitoes, flies and others, and must be avoided.

Benchmarks

1. The building site is adequately drained to avoid the accumulation of stagnant water.

Heating, air conditioning, ventilation and light
Heating, air-conditioning and ventilation should be appropriate for the climatic conditions and provide workers with a comfortable and healthy environment to rest and spend their spare time.

Benchmarks

1. For facilities located in cold weather zones, the temperature is kept at a level of around 20 degrees Celsius notwithstanding the need for adequate ventilation.

2. For facilities located in hot weather zones, adequate ventilation and/or air conditioning systems are provided.

3. Both natural and artificial lighting are provided and maintained in living facilities. It is best practice that the window area represents not less than 5% to 10% of the floor area. Emergency lighting is provided.

Water
Special attention to water quality and quantity is absolutely essential. To prevent dehydration, water poisoning and diseases resulting from lack of hygiene, workers should always have easy access to a source of clean water. An adequate supply of potable water must be available in the same buildings where bedrooms or dormitories are provided. Drinking water must meet local or WHO drinking water standards[7] and water quality must be monitored regularly. Depending on the local context, it could either be produced by dedicated catchment and treatment facilities or tapped from existing municipal facilities if their capacity and quality are adequate.

Benchmarks

1. Access to an adequate and convenient supply of free potable water is always available to workers. Depending on climate, weather conditions and accommodation standards, 80 to 180 litres per person per day are available.

2. Drinking water meets national/local or WHO drinking water standards.[8]

3. All tanks used for the storage of drinking water are constructed and covered as to prevent water stored therein from becoming polluted or contaminated.

4. Drinking water quality is regularly monitored.

Wastewater and solid waste
Wastewater treatment and effluent discharge as well as solid waste treatment and disposal must comply with local or World Bank effluent discharge standards[9] and be adequately designed to prevent contamination of any water body, to ensure hygiene and to avoid the spread of infections and diseases, the proliferation of mosquitoes, flies, rodents, and other pest vectors. Depending on the local context, treatment and disposal services can be either provided by dedicated or existing municipal facilities.

Benchmarks

1. Wastewater, sewage, food and any other waste materials are adequately discharged, in compliance with local or World Bank standards – whichever is more stringent – and without causing any significant impacts on camp residents, the biophysical environment or surrounding communities.

2. Specific containers for rubbish collection are provided and emptied on a regular basis. Standards range from providing an adequate number of rubbish containers to providing leak proof, non-absorbent, rust and corrosion-resistant containers protected from insects and rodents. In addition it is best practice to locate rubbish containers 30 metres from each shelter on a wooden, metal, or concrete stand. Such containers must be emptied at regular intervals (to be determined based on temperatures and volumes generated) to avoid unpleasant odours associated with decaying organic materials.

3. Pest extermination, vector control and disinfection are carried out throughout the living facilities in compliance with local requirements and/or good practice. Where warranted, pest and vector monitoring should be performed on a regular basis.

7. www.who.int/water_sanitation_health/dwq/en/
8. ibid

9. As per the "Pollution Prevention and Abatement Handbook", World Bank Group, July 1998, available from www.worldbank.org

C. Room/dormitory facilities

The standards of the rooms or dormitory facilities are important to allow workers to rest properly and to maintain good standards of hygiene. Overcrowding should be avoided particularly. This also has an impact on workers' productivity and reduces work-related accidents. It is generally acknowledged that rooms/dormitories should be kept clean and in a good condition. Exposure to noise and odour should be minimised. In addition, room/dormitory design and equipment should strive to offer workers a maximum of privacy. Resorting to dormitories should be minimised and single or double rooms are preferred. Dormitories and rooms must be single-sex.

Benchmarks

1. Rooms/dormitories are kept in good condition.

2. Rooms/dormitories are aired and cleaned at regular intervals.

3. Rooms/dormitories are built with easily cleanable flooring material.

4. Sanitary facilities are located within the same buildings and provided separately for men and women.

5. Density standards are expressed either in terms of minimal volume per resident or of minimal floor space. Usual standards range from 10 to 12.5 cubic metres (volume) or 4 to 5.5 square metres (surface).

6. A minimum ceiling height of 2.10 metres is provided.

7. In collective rooms, which are minimised, in order to provide workers with some privacy, only a reasonable number of workers are allowed to share the same room. Standards range from 2 to 8 workers.

8. All doors and windows should be lockable, and provided with mosquito screens where conditions warrant.

9. There should be mobile partitions or curtains to ensure privacy.

10. Every resident is provided with adequate furniture such as a table, a chair, a mirror and a bedside light.

11. Separate sleeping areas are provided for men and women, except in family accommodation.

Additional issue

Irrespective of whether workers are supposed to keep their facilities clean, it is the responsibility of the accommodation manager to ensure that rooms/dormitories and sanitary facilities are in good condition.

Bed arrangements and storage facilities

The provision of an adequate numbers of beds of an appropriate size is essential to provide workers with decent, safe and hygienic conditions to rest and sleep. Here again, particular attention should be paid to privacy. Consideration should be given to local customs so beds could be replaced by hammocks or sleeping mats for instance.

Benchmarks

1. A separate bed for each worker is provided. The practice of "hot-bedding" should be avoided.

2. There is a minimum space between beds of 1 metre.

3. Double deck bunks are not advisable for fire safety and hygiene reasons, and their use is minimised. Where they are used, there must be enough clear space between the lower and upper bunk of the bed. Standards range from to 0.7 to 1.10 metres.

4. Triple deck bunks are prohibited.

5. Each worker is provided with a comfortable mattress, pillow, cover and clean bedding.

6. Bed linen is washed frequently and applied with repellents and disinfectants where conditions warrant (malaria).

7. Facilities for the storage of personal belongings for workers are provided. Standards vary from providing an individual cupboard for each worker to providing 475-litre big lockers and 1 metre of shelf unit.

8. Separate storage for work boots and other personal protection equipment, as well as drying/airing areas may need to be provided depending on conditions.

D. Sanitary and toilet facilities

It is essential to allow workers to maintain a good standard of personal hygiene but also to prevent contamination and the spread of diseases which result from inadequate sanitary facilities. Sanitary and toilet facilities will always include all of the following: toilets, urinals, washbasins and showers. Sanitary and toilet facilities should be kept in a clean and fully working condition. Facilities should also be constructed of materials that are easily cleanable and ensure privacy. Sanitary and toilet facilities are never shared between male and female residents, except in family accommodation. Where necessary, specific additional sanitary facilities are provided for women.

Benchmarks

1. Sanitary and toilet facilities are constructed of materials that are easily cleanable.

2. Sanitary and toilet facilities are cleaned frequently and kept in working condition.

3. Sanitary and toilet facilities are designed to provide workers with adequate privacy, including ceiling to floor partitions and lockable doors.

4. Sanitary and toilet facilities are not shared between men and women, except in family accommodation.

Toilet facilities

Toilet arrangements are essential to avoid any contamination and prevent the spread of infectious disease.

Benchmarks

1. An adequate number of toilets is provided to workers. Standards range from 1 unit to 15 persons to 1 unit per 6 persons. For urinals, usual standards are 1 unit to 15 persons.

2. Toilet facilities are conveniently located and easily accessible. Standards range from 30 to 60 metres from rooms/dormitories. Toilet rooms shall be located so as to be accessible without any individual passing through any sleeping room. In addition, all toilet rooms should be well-lit, have good ventilation or external windows, have sufficient hand wash basins and be conveniently located. Toilets and other sanitary facilities should be ("must be" in cold climates) in the same building as rooms and dormitories.

Showers/bathrooms and other sanitary facilities

Hand wash basins and showers should be provided in conjunction with rooms/dormitories. These facilities must be kept in good working condition and cleaned frequently. The flooring for shower facilities should be of hard washable materials, damp-proof and properly drained. Adequate space must be provided for hanging, drying and airing clothes. Suitable light, ventilation and soap should be provided. Lastly, hand washing, shower and other sanitary facilities should be located within a reasonable distance from other facilities and from sleeping facilities in particular.

Benchmarks

1. Shower/bathroom flooring is made of anti-slip hard washable materials.

2. An adequate number of handwash facilities is provided to workers. Standards range from 1 unit to each 15 persons to 1 unit per 6 workers. Handwash facilities should consist of a tap and a basin, soap and hygienic means of drying hands.

3. An adequate number of shower/bathroom facilities is provided to workers. Standards range from 1 unit to 15 persons to 1 unit per 6 persons.

4. Showers/bathrooms are conveniently located.

5. Shower/bathroom facilities are provided with an adequate supply of cold and hot running water.

E. Canteen, cooking and laundry facilities

Good standards of hygiene in canteen/dining halls and cooking facilities are crucial. Adequate canteen, cooking and laundry facilities and equipments should also be provided. When caterers are contracted to manage kitchens and canteens, special attention should be paid to ensure that contractors take into account and implement the benchmarks below, and that adequate reporting and monitoring mechanisms are in place. When workers can individually cook their meals, they should be provided with a space separate from the sleeping areas. Facilities must be kept in a clean and sanitary condition. In addition, canteen, kitchen, cooking and laundry floors, ceilings and walls should be made of easily cleanable materials.

Benchmarks

1. Canteen, cooking and laundry facilities are built in adequate and easy to clean materials.

2. Canteen, cooking and laundry facilities are kept in a clean and sanitary condition.

3. If workers can cook their own meals, kitchen space is provided separate from sleeping areas.

Laundry facilities

Providing facilities for workers to wash both work and non-work related clothes is essential for personal hygiene. The alternative is for the employer to provide a free laundry service.

Benchmarks

1. Adequate facilities for washing and drying clothes are provided. Standards range from providing sinks or tubs with hot and cold water, cleaning soap and drying lines to providing washing machines and dryers.

2. When work clothes are used in contact with dangerous substance (for example, application of pesticide), special laundry facilities (washing machines) should be provided.

Additional issue

When workers are provided with facilities allowing them to individually do their laundry or cooking, it should be the responsibility of each worker to keep the facilities in a clean and sanitary condition. Nonetheless, it is the responsibility of the accomodation manager to make sure the standards are respected and to provide an adequate cleaning, disinfection and pest/vector control service when necessary.

Additional issue

When the employer provides family accommodation, it is best practice to provide each family with a private kitchen or the necessary cooking equipment to allow the family to cook on their own.

Canteen and cooking facilities

Canteen and cooking facilities should provide sufficient space for preparing food and eating, as well as conform to hygiene and safety requirements.

Benchmarks

1. Canteens have a reasonable amount of space per worker. Standards range from 1 square metre to 1.5 square metres.

2. Canteens are adequately furnished. Standards range from providing tables, benches, individual drinking cups and plates to providing special drinking fountains.

3. Places for food preparation are designed to permit good food hygiene practices, including protection against contamination between and during food preparation.

4. Kitchens are provided with facilities to maintain adequate personal hygiene including a sufficient number of washbasins designated for cleaning hands with clean, running water and materials for hygienic drying.

5. Wall surfaces adjacent to cooking areas are made of fire-resistant materials. Food preparation tables are also equipped with a smooth durable washable surface. Lastly, in order to enable easy cleaning, it is good practice that stoves are not sealed against a wall, benches and fixtures are not built into the floor, and all cupboards and other fixtures and all walls and ceilings have a smooth durable washable surface.

6. All kitchen floors, ceiling and wall surfaces adjacent to or above food preparation and cooking areas are built using durable, non-absorbent, easily cleanable, non-toxic materials.

7. Wall surfaces adjacent to cooking areas are made of fire-resistant materials. Food preparation tables are equipped with a smooth, durable, easily cleanable, non-corrosive surface made of non-toxic materials. Lastly, in order to enable easy cleaning, it is good practice that stoves are not sealed against a wall, benches and fixtures are not built into the floor, and all cupboards and other fixtures have a smooth, durable and washable surface.

8. Adequate facilities for cleaning, disinfecting and storage of cooking utensils and equipment are provided.

9. Food waste and other refuse are to be adequately deposited in sealable containers and removed from the kitchen frequently to avoid accumulation.

F. Standards for nutrition and food safety

When cooking for a number of workers, hygiene and food safety are absolutely critical. In addition to providing safe food, providing nutritious food is important as it has a very direct impact on workers' productivity and well-being. An ILO study demonstrates that good nutrition at work leads to gains in productivity and worker morale, prevention of accidents and premature deaths and reductions in health care costs.[10]

Benchmarks

1. The WHO 5 keys to safer food or an equivalent process is implemented (see Box 6 below).

2. Food provided to workers contains an appropriate level of nutritional value and takes into account religious/cultural backgrounds; different choices of food are served if workers have different cultural/religious backgrounds.

3. Food is prepared by cooks. It is also best practice that meals are planned by a trained nutritionist.

Box 6 - Five keys to safer food

Keep clean Wash your hands before handling food and often during food preparation. Wash your hands after going to the toilet. Wash and sanitise all surfaces and equipment used for food preparation. Protect kitchen areas and food from insects, pests and other animals.	While most micro organisms do not cause disease, dangerous micro organisms are widely found in soil, water, animals and people. These micro organisms are carried on hands, wiping cloths and utensils, especially cutting boards and the slightest contact can transfer them to food and cause food borne diseases.
Separate raw and cooked Separate raw meat, poultry and seafood from other foods. Use separate equipment and utensils such as knives and cutting boards for handling raw foods. Store food in containers to avoid contact between raw and prepared foods.	Raw food, especially meat, poultry and seafood, and their juices, can contain dangerous micro organisms which may be transferred onto other foods during food preparation and storage.
Cook thoroughly Cook food thoroughly, especially meat, poultry, eggs and seafood. Bring foods like soups and stews to boiling to make sure that they have reached 70°C. For meat and poultry, make sure that juices are clear, not pink. Ideally, use a thermometer. Reheat cooked food thoroughly.	Proper cooking kills almost all dangerous micro organisms. Studies have shown that cooking food to a temperature of 70°C can help ensure it is safe for consumption. Foods that require special attention include minced meats, rolled roasts, large joints of meat and whole poultry.
Keep food at safe temperatures Do not leave cooked food at room temperature for more than 2 hours. Refrigerate promptly all cooked and perishable food (preferably below 5°C). Keep cooked food piping hot (more than 60°C) prior to serving. Do not store food too long even in the refrigerator. Do not thaw frozen food at room temperature.	Micro organisms can multiply very quickly if food is stored at room temperature. By holding at temperatures below 5°C or above 60°C, the growth of micro organisms is slowed down or stopped. Some dangerous micro organisms still grow below 5°C.
Use safe water and raw materials Use safe water or treat it to make it safe. Select fresh and wholesome foods. Choose foods processed for safety, such as pasteurised milk. Wash fruits and vegetables, especially if eaten raw. Do not use food beyond its expiry date.	Raw materials, including water and ice, may be contaminated with dangerous micro organisms and chemicals. Toxic chemicals may be formed in damaged and mouldy foods. Take care in selection of raw materials and implement simple measures such as washing.

Source: World Health Organization, Food Safety
www.who.int/foodsafety/publications/consumer/en/5keys_en.pdf

10. C. Wanjek (2005), "Food at Work – Workplace solutions for malnutrition, obesity and chronic disease", International Labour Organization, Geneva.

G. Medical facilities

Access to adequate medical facilities is important to maintain workers' health and to provide adequate responses in case of health emergency situations. The availability or level of medical facilities provided in workers' accommodation is likely to depend on the number of workers living on site, the medical facilities already existing in the neighbouring communities and the availability of transport. However, first aid must always be available on site.

First aid facilities
Providing adequate first aid training and facilities can save lives and prevent minor injuries becoming major ones.

Other medical facilities
Depending on the number of workers living on site and the medical services offered in the surrounding communities, it is important to provide workers with additional medical facilities. Special facilities for sick workers and medical services such as dental care, surgery, a dedicated emergency room can, for instance, be provided.

Benchmarks

1. A number of first aid kits adequate to the number of residents are available.

2. First aid kits are adequately stocked. Where possible a 24/7 first aid service/facility is available.

3. An adequate number of staff/workers is trained to provide first aid.

4. Where possible and depending on the medical infrastructures existing in the community, other medical facilities are provided (nurse rooms, dental care, minor surgery).

Box 7 - UK/HSE First Aid facilities

What should be in a first aid kit?

There is no standard list and it very much depends on the assessment of the needs in a particular workplace:

- a leaflet giving general guidance on first aid, for example HSE leaflet *Basic advice on first aid at work*
- individually wrapped sterile adhesive dressings (assorted sizes)
- two sterile eye pads
- four individually wrapped triangular bandages (preferably sterile)
- six safety pins
- six medium-sized (approximately 12 cm x 12 cm) individually wrapped sterile unmedicated wound dressings
- two large (approximately 18 cm x 18 cm) sterile individually wrapped unmedicated wound dressings
- one pair of disposable gloves.

What should be kept in the first aid room?

The room should contain essential first aid facilities and equipment. Typical examples of these are:

- a sink with hot and cold running water
- drinking water and disposable cups
- soap and paper towels
- a store for first aid materials
- foot-operated refuse containers, lined with disposable yellow clinical waste bags or a container for the safe disposal of clinical waste
- a couch with waterproof protection, clean pillows and blankets
- a chair
- a telephone or other communication equipment
- a record book for recording incidents where first aid has been given.

Source: UK Health and Safety Executive

H. Leisure, social and telecommunication facilities

Basic leisure and social facilities are important for workers to rest and also to socialise during their free time. This is particularly true where workers' accommodation is located in remote areas far from any communities. Where workers' accommodation is located in the vicinity of a village or a town, existing leisure or social facilities can be used so long as this does not cause disruption to the access and enjoyment of local community members. But in any case, social spaces should also be provided on site. Exercise and recreational facilities will increase workers' welfare and reduce the impact of the presence of workers in the surrounding communities. In addition it is also important to provide workers with adequate means to communicate with the outside world, especially when workers' accommodation is located in a remote location or where workers live on site without their family or are migrants. Consideration of cultural attitudes is important. Provision of space for religious observance needs to be considered, taking account of the local context and potential conflicts in certain situations.

Benchmarks

1. Basic collective social/rest spaces are provided to workers. Standards range from providing workers multi-purpose halls to providing designated areas for radio, TV, cinema.

2. Recreational facilities are provided. Standards range from providing exercise equipment to providing a library, swimming pool, tennis courts, table tennis, educational facilities.

3. Workers are provided with dedicated places for religious observance if the context warrants.

4. Workers have access to public phones at affordable/public prices (that is, not inflated).

5. Internet facilities can also be provided, particularly where large numbers of expatriates/Third Country Nationals (TCNs) are accommodated.

Box 8 - Examples of social/leisure facilities

In Qatar there is a newly built 170-hectare complex which accommodates contractors and more than 35,000 workers for a project run by a major oil company. At the heart of this complex, the recreation area includes extensive sport facilities, a safety-training centre, an outdoor cinema and a park. The purpose of those facilities goes beyond providing adequate accommodation to the large numbers of contractors and workers on this project but is designed to provide the same level of services as a small town. The accommodation complex has a mayor, as well as a dedicated welfare team which is responsible for the workers' welfare, cultural festivals and also acts as the community's advocates.

II. Managing workers' accommodation

Once the living facilities have been constructed and are operational, effective ongoing management of living facilities is essential. This encompasses issues such as the physical maintenance of buildings, security and consultation with residents and neighbouring communities in order to ensure the implementation of the housing standards in the long term.

A. Management and staff

Worker camps and housing facilities should have a written management plan, including management policies or plans on health and safety, security, living conditions, workers' rights and representation, relationships with the communities and grievance processes. Part of those policies and plans can take the form of codes of conduct. The quality of the staff managing and maintaining the accommodation facilities will have a decisive impact on the level of standards which are implemented and the well-being of workers (for instance on the food safety or overall hygiene standards). It is therefore important to ensure that managers are competent and other workers are adequately skilled. The manager will be responsible for overseeing staff, for ensuring the implementation of the accommodation standards and for the implementation of the management plans. It is important the accommodation manager has the corresponding authority to do so.

If the facility is being managed by a contractor, as is often the case, the expected housing and management standards should be specified in the relevant contract, and mechanisms to ensure that those standards are implemented should be set up. As part of this process, the accommodation manager (or contractor) should have a duty to monitor the application of the accommodation standards and to report frequently on their implementation to the client.

Benchmarks

1. There are management plans and policies especially in the field of health and safety (with emergency responses), security, workers' rights, relationships with the communities.

2. An appointed person with the adequate background and experience is in charge of managing the workers' accommodation.

3. If contractors are being used, there are clear contractual management responsibilities and monitoring and reporting requirements.

4. Depending on the size of the accommodation, there is a sufficient number of staff in charge of cleaning, cooking and of general maintenance.

5. Such staff are recruited from the local communities.

6. Staff have received basic health and safety training.

7. Persons in charge of the kitchen are trained in nutrition and food-handling and adequately supervised.

B. Charging fees for accommodation and services

Charging fees for the accommodation or the services provided to workers such as food or transport should be avoided where workers do not have the choice to live or eat anywhere else, or if deemed unavoidable, should take into account the specific nature of workers' accommodation. Any charges should be transparent, discussed during recruitment and specified in workers' contracts. Any such charges should still leave workers with sufficient income and should never lead to a worker becoming indebted to an employer.

Benchmarks

1. When fees are charged, workers are provided with clear information and a detailed description of all payments made such as rent, deposit and other fees.

2. When company housing is considered to be part of workers' wages, it is best practice that workers are provided with an employment contract clearly specifying housing arrangements and regulations, in particular rules concerning payments and fees, facilities and services offered and rules of notice.

3. When fees are charged, the renting arrangements are fair and do not cost the worker more than a small proportion of income and never include a speculative profit.

4. Food and other services are free or are reasonably priced, never above the local market price.

5. The provision of accommodation or other services by employers as a payment for work is prohibited.

Additional issue

To avoid that fair renting arrangements turn into unfair ones, any deposit of advance should be set at a reasonable level and it is best practice that renting prices include a fixed fee covering the water needed and the use of the energy required to the functioning of the heating/cooling/ventilation/cooking systems. However, in such cases it might be necessary to raise workers' awareness to ensure that workers will use the facilities responsibly, particularly in areas where water is scarce.

C. Health and safety on site

The company or body in charge of managing the workers' accommodation should have the prime responsibility for ensuring workers' physical well-being and integrity. This involves making sure that the facilities are kept in good condition (ensuring that sanitary standards or fire regulations are respected for instance) and that adequate health and safety plans and standards are designed and implemented.

Benchmarks

1. Health and safety management plans including electrical, mechanical, structural and food safety have been carefully designed and are implemented.

2. The person in charge of managing the accommodation has a specific duty to report to the health authorities the outbreak of any contagious diseases, food poisoning and other important casualties.

3. An adequate number of staff/workers is trained to provide first aid.

4. A specific fire safety plan is prepared, including training of fire wardens, periodic testing and monitoring of fire safety equipment and periodic drills.

5. Guidance on the detrimental effects of the abuse of alcohol and drugs and other potentially harmful substances and the risk and concerns relating to HIV/AIDS and of other health risk-related activities is provided to workers. It is best practice to develop a clear policy on this issue.

6. Workers have access to adequate preventive measures such as contraception (condoms in particular) and mosquito nets.

7. Workers have easy access to medical facilities and medical staff. Where possible, female doctors/nurses should be available for female workers.

8. Emergency plans on health and fire safety are prepared. Depending on the local context, additional emergency plans are prepared as needed to handle specific occurrences (earthquakes, floods, tornadoes).

D. Security of workers' accommodation

Ensuring the security of workers and their property on the accommodation site is of key importance. To this end, a security plan must be carefully designed including appropriate measures to protect workers against theft and attacks. Policies regarding the use of force (force can only be used for preventive and defensive purposes in proportion to the nature and the extent of the threat) should also be carefully designed. To implement those plans, it may be necessary to contract security services or to recruit one or several staff whose main responsibility is to provide security to safeguard workers and property. Before making any security arrangements, it is necessary to assess the risks of such arrangements to those within and outside the workers' accommodation and to respect best international practices, including IFC PS4 and EBRD PR4 and applicable law.[11] Particular attention should be paid to the safety and security of women workers.

Benchmarks

1. A security plan including clear measures to protect workers against theft and attack is implemented.

2. A security plan including clear policies on the use of force has been carefully designed and is implemented.

3. Security staff have been checked to ensure that they have not been implicated in any previous crimes or abuses. Where appropriate, security staff from both genders are recruited.

4. Security staff have a clear mandate and have received clear instruction about their duties and responsibilities, in particular their duties not to harass, intimidate, discipline or discriminate against workers.

5. Security staff have received adequate training in dealing with domestic violence and the use of force.

6. Security staff have a good understanding about the importance of respecting workers' rights and the rights of the communities.

7. Body searches are only allowed in specific circumstances and are performed by specially trained security staff using the least-intrusive means possible. Pat down searches on female workers can only be performed by female security staff.

8. Security staff adopt an appropriate conduct towards workers and communities.

9. Workers and members of the surrounding communities have specific means to raise concerns about security arrangement and staff.

11. See for instance the Voluntary Principles on Security and Human Rights. www.voluntaryprinciples.org/principles

E. Workers' rights, rules and regulations on workers' accommodation

Freedoms and human rights of workers should be recognised and respected within their living quarters just as within the working environment. House rules and regulations should be reasonable and non discriminatory. It is best practice that workers' representatives are consulted about those rules. House rules and regulations should not prevent workers from exercising their basic rights. In particular, workers' freedom of movement needs to be preserved if they are not to become effectively "trapped". To this end it is good practice to provide workers with 24/7 access to the accommodation and free transport services to and from the surrounding communities. Any restriction to this freedom of movement should be limited and duly justified. Penalties for breaking the rules should be proportional and implemented through a proper procedure allowing workers to defend themselves and to challenge the decision taken. The relationship between continuing employment and compliance with the rules of the workers' accommodation should be clear and particular attention should be paid to ensure that housing rules do not create indirect limitation of the right to freedom of association. Best practice might include a code of conduct relating to the accommodation to be signed together with the contract of employment.

Box 9 - Dole housing plantation regulation in Costa Rica

In every plantation there is an internal accommodation regulation that every worker is required to sign together with his/her employment contract. That document describes the behaviour which is expected from workers at all times and basic rules such as the prohibition of alcohol and the interdiction to make noise after a certain time at night. In case there is any problem concerning the application of those internal rules, a set of disciplinary procedures which have been designed with the workers' representatives can be enforced. Workers are absolutely free to enter or leave the site and do not have any restrictions in relation to accessing their living quarters. Families are not allowed in the living quarters unless they have been registered for a visit.

Benchmarks

1. Restriction of workers' freedom of movement to and from the site is limited and duly justified. It is good practice to provide workers 24/7 access to the accommodation site. Any restrictions based on security reasons should be balanced by the necessity to respect workers' freedom of movement.

2. Where possible, an adequate transport system to surrounding communities is provided. It is good practice to provide workers with free transportation to and from local communities.

3. Withholding workers' ID papers is prohibited.

4. Freedom of association is expressly respected. Provisions restricting workers' rights on site should take into account the direct and indirect effect on workers' freedom of association. It is best practice to provide trade union representatives access to workers in the accommodation site.

5. Workers' gender and religious, cultural and social backgrounds are respected. In particular, workers should be provided with the possibility of celebrating religious holidays and observances.

6. Workers are made aware of their rights and obligations and are provided with a copy of the internal workers' accommodation rules, procedures and sanction mechanisms in a language or through a media which they understand.

7. Housing regulations, including those relating to allocation of housing, should be non-discriminatory. Any justifiable discriminatory rules – for example all-male dormitories – should be strictly limited to the rules which are necessary to ensure the smooth running of the worker camp and to maintain a good relationship with the surrounding communities.

8. Where possible, visitor access should be allowed.

9. Decisions should be made on whether to prohibit alcohol, tobacco and third party access or not from the camp and the relevant rules should be clearly communicated to all residents and workers.

10. A fair and non-discriminatory procedure exists to implement disciplinary procedures including the right of workers to defend themselves (see also next section).

F. Consultation and grievance mechanisms

All residents should be made aware of any rules governing the accommodation and the consequences of breaking such rules. Processes that allow for consultation between site management and the resident workers will assist in the smooth running of an accommodation site. These may include a dormitory or camp committee as well as formal processes that allow workers to lodge any grievances about their accommodation.

Benchmarks

1. Mechanisms for workers' consultation have been designed and implemented. It is best practice to set up a review committee which includes representatives elected by workers.

2. Processes and mechanisms for workers to articulate their grievances are provided to workers. Such mechanisms are in accordance with PS2/PR2.

3. Workers subjected to disciplinary proceedings arising from behaviour in the accommodation should have access to a fair and transparent hearing with the possibility to contest decisions and refer the dispute to independent arbitration or relevant public authorities.

4. In case conflicts between workers themselves or between workers and staff break out, workers have the possibility of easily accessing a fair conflict resolution mechanism.

5. In cases where more serious offences occur, including serious physical or mental abuse, there are mechanisms to ensure full cooperation with the police authority (where adequate).

Additional issue

Alcohol is a complex issue and requires a very clear policy from the workers' accommodation management. If a non-alcohol policy is taken, special attention should be paid to clearly communicate the interdiction, how it applies and the consequences for breaching this rule. Special attention should also be paid to enforce it adequately.

G. Management of community relations

Workers' living facilities have various ongoing impacts on adjacent communities. In order to manage these, it is good practice to design a thorough community relations management plan. This plan will contain the processes to implement the findings of the preliminary community impact assessment and to identify, manage, mitigate or enhance ongoing impacts of the workers' accommodation on the surrounding communities. Issues to be taken into consideration include:

- community development – impact of workers' camp on local employment, possibility of enhancing local employment and income generation through local sourcing of goods and services
- community needs – ways to identify and address community needs related to the arrival of specific infrastructures such as telecommunications, water sanitation, roads, health care, education, housing
- community health and safety – addressing and reducing the risk in the increase in communicable diseases, corruption, trade in illegal substances such as drugs, alcohol (in the Muslim context), petty crimes and other sorts of violence, road accidents
- community social and cultural cohesion – ways to mitigate the impact of the presence of large numbers of foreign workers, often males, with different cultural and religious background, ways to mitigate the possible shift in social, economic and political structures due to changes in access to income generation opportunities.

Benchmarks

1. Community relations plans addressing issues around community development, community needs, community health and safety and community social and cultural cohesion have been designed and implemented.

2. Community relations plans include the setting up of a liaison mechanism allowing a constant exchange of information and consultation with the local communities in order to identify and respond quickly to any problems and maintain good working relationships.

3. A senior manager is in charge of implementing the community relations management plan and liaising with the community.

4. The impacts of workers' accommodation on local communities are periodically reviewed, mitigated or enhanced.

5. Community representatives are provided with an easy means to voice their opinions and to lodge complaints.

6. There is a transparent and efficient process for dealing with community grievances, in accordance with PS1/PR10.

Box 10 - Examples of community relations management

Community consultation in the Baku-Tbilisi-Ceyhan (BTC) pipeline

The BTC pipeline's Environment and Social Management Plans incorporated a Worker Camp Management Plan to be implemented by the construction contractor. As part of ongoing community liaison over the project as a whole, community liaison officers were appointed for worker camps who were responsible for meeting regularly with communities, identifying issues and addressing community concerns. A particular responsibility was to review HR records and disciplinary logs at worker camps to assess that rules were being implemented effectively and that any community liaison after any incidents was effective.

ANNEX I: CHECKLIST ON WORKERS' ACCOMMODATION

	Y	N	N/A	Comments
General regulatory framework				
Have the international/national/local regulatory frameworks been reviewed?				
Are mandatory provisions on workers' accommodation identified?				
Assessing the need for workers' accommodation				
Availability of the workforce				
Has there been an assessment of workers' availability in the neighbouring communities?				
Has there been an assessment of the skills and competencies of the local workforce and how do those skills and competencies fit the project's need?				
Has there been an assessment of the possibility of training a local workforce in order to fulfil the project's needs?				
Availability of housing				
Has there been a comprehensive assessment of the different type of housing available in the surrounding communities prior to building any workers' accommodation?				
For a larger project: is that assessment included in the Environmental and Social Impact Assessment?				
Has there been an assessment of the impact on the communities of using existing housing opportunities?				
Have measures to mitigate adverse impacts on the local housing market been identified and included in the Environmental and Social Action Plan (ESAP) or other relevant action plan?				

	Y	N	N/A	Comments
Assessing impacts of workers' accommodation on communities				
Has a community impact assessment been carried out as part of the Environmental and Social Assessment of the overall project with a view to mitigate the negative impacts of the workers' accommodation on the surrounding communities and to enhance the positive ones?				
Have the potential health and safety impacts and consequences of land acquisition and involuntary resettlement occurring during the construction phase of the workers' accommodation been included in the assessment?				
Have the impacts of workers' accommodation on community infrastructures, services and facilities been included in the assessment?				
Have the impacts on local community's businesses and local employment been included in the assessment?				
Have general impacts of workers' accommodation on communities' health, (notably the increased risk of road accidents and of communicable diseases), and community social cohesion been included in the assessment?				
Does the assessment include appropriate mitigation measures to address any adverse impacts identified?				
Types of workers' accommodation				
Has consideration been given to provision of family accommodation?				
Are individual accommodations comprising bedrooms, sanitary and cooking facilities provided as part of the family accommodation?				
Are adequate nursery/school facilities provided?				
Is special attention paid to providing adequate safety for children?				

Standards for workers' accommodation

	Y	N	N/A	Comments
National/local standards				
Have the relevant national/local regulations been identified and implemented?				
General living facilities				
Is the location of the facilities designed to avoid flooding or other natural hazards?				
Are the living facilities located within a reasonable distance from the worksite?				
Is transport provided to worksite safe and free?				
Are the living facilities built using adequate materials, kept in good repair and kept clean and free from rubbish and other refuse?				
Drainage				
Is the site adequately drained?				
Heating, air conditioning, ventilation and light				
Depending on climate are living facilities provided with adequate heating, ventilation, air conditioning and light systems including emergency lighting?				
Water				
Do workers have easy access to a supply of clean/ potable water in adequate quantities?				
Does the quality of the water comply with national/local requirements or WHO standards?				
Are tanks used for the storage of drinking water constructed and covered to prevent water stored therein from becoming polluted or contaminated?				
Is the quality of the drinking water regularly monitored?				

	Y	N	N/A	Comments
Wastewater and solid waste				
Are wastewater, sewage, food and any other waste materials adequately discharged in compliance with local or World Bank standards and without causing any significant impacts on camp residents, the environment or surrounding communities?				
Are specific containers for rubbish collection provided and emptied on a regular basis?				
Are pest extermination, vector control and disinfection undertaken throughout the living facilities?				
Rooms/dormitories facilities				
Are the rooms/dormitories kept in good condition?				
Are the rooms/dormitories aired and cleaned at regular intervals?				
Are the rooms/dormitories built with easily cleanable flooring material?				
Are the rooms/dormitories and sanitary facilities located in the same buildings?				
Are residents provided with enough space?				
Is the ceiling height high enough?				
Is the number of workers sharing the same room/dormitory minimised?				
Are the doors and windows lockable and provided with mosquito screens when necessary?				
Are mobile partitions or curtains provided?				
Is suitable furniture such as table, chair, mirror, bedside light provided for every worker?				
Are separate sleeping areas provided for men and women?				

	Y	N	N/A	Comments
Bed arrangements and storage facilities				
Is there a separate bed provided for every worker?				
Is the practice of "hot-bedding" prohibited?				
Is there a minimum space of 1 metre between beds?				
Is the use of double deck bunks minimised?				
When double deck bunks are in use, is there enough clear space between the lower and upper bunk of the bed?				
Are triple deck bunks prohibited?				
Are workers provided with comfortable mattresses, pillows and clean bed linens?				
Are the bed linen washed frequently and applied with adequate repellents and disinfectants (where conditions warrant)?				
Are adequate facilities for the storage of personal belongings provided?				
Are there separate storages for work clothes and PPE and depending on condition, drying/airing areas?				
Sanitary and toilet facilities				
Are sanitary and toilet facilities constructed from materials that are easily cleanable?				
Are sanitary and toilet facilities cleaned frequently and kept in working condition?				
Are toilets, showers/bathrooms and other sanitary facilities designed to provide workers with adequate privacy including ceiling to floor partitions and lockable doors?				
Are separate sanitary and toilet facilities provided for men and women?				

	Y	N	N/A	Comments
Toilet facilities				
Is there an adequate number of toilets and urinals?				
Are toilet facilities conveniently located and easily accessible?				
Showers/bathrooms and other sanitary facilities				
Is the shower flooring made of anti-slip hard washable materials?				
Is there an adequate number of hand wash basins and showers/bathrooms facilities provided?				
Are the sanitary facilities conveniently located?				
Are shower facilities provided with an adequate supply of cold and hot running water?				
Canteen, cooking and laundry facilities				
Are canteen, cooking and laundry facilities built with adequate and easy to clean materials?				
Are the canteen, cooking and laundry facilities kept in clean and sanitary condition?				
If workers cook their own meals, is kitchen space provided separately from the sleeping areas?				
Laundry facilities				
Are adequate facilities for washing and drying clothes provided?				
Canteen and cooking facilities				
Are workers provided with enough space in the canteen?				
Are canteens adequately furnished?				
Are kitchens provided with the facilities to maintain adequate personal hygiene?				

	Y	N	N/A	Comments
Are places for food preparation adequately ventilated and equipped?				
Are kitchen floor, ceiling and wall surfaces adjacent to or above food preparation and cooking areas built in non-absorbent, durable, non-toxic, easily cleanable materials?				
Are wall surfaces adjacent to cooking areas made of fire-resistant materials and food preparation tables equipped with a smooth, durable, non-corrosive, non-toxic, washable surface?				
Are adequate facilities for cleaning, disinfecting and storage of cooking utensils and equipment provided?				
Are there adequate sealable containers to deposit food waste and other refuse? Is refuse frequently removed from the kitchen to avoid accumulation?				
Standards for nutrition and food safety				
Is there a special sanitary process such as the WHO "5 keys to safer food" implemented in relation to food safety?				
Does the food provided contain appropriate nutritional value?				
Does the food provided take into account workers' religious/cultural backgrounds?				
Medical facilities				
Are first aid kits provided in adequate numbers?				
Are first-aid kits adequately stocked?				
Is there an adequate number of staff/workers trained to provide first aid?				
Are there any other medical facilities/services provided on site? If not, why?				
Leisure, social and telecommunications facilities				
Are basic social collective spaces and adequate recreational areas provided to workers?				
Are workers provided with dedicated places for religious observance?				
Can workers access a telephone at an affordable/public price?				
Are workers provided with access to internet facilities?				

Managing workers' accommodation

Management and staff

	Y	N	N/A	Comments
Are there carefully designed worker camp management plans and policies especially in the field of health and safety (including emergency responses), security, workers' rights and relationships with the communities?				
Where contractors are used, have they clear contractual management responsibilities and duty to report?				
Does the person appointed to manage the accommodation have the required background, competency and experience to conduct his mission and is he/she provided with the adequate responsibility and authority to do so?				
Is there enough staff to ensure the adequate implementation of housing standards (cleaning, cooking and security in particular)?				
Are staff members recruited from surrounding communities?				
Have the staff received basic health and safety training?				
Are the persons in charge of the kitchen particularly trained in nutrition and food handling and adequately supervised?				

Charging fees for accommodation and services

Are the renting arrangements fair and transparent?				
Are workers provided with adequate information about payment made?				
Where appropriate, are renting arrangements and regulations clearly included in workers' employment contracts?				
Are food and other services provided for free or reasonably priced, that is, not above the local market price?				
Is the payment in kind for accommodation and services prohibited?				

	Y	N	N/A	Comments
Health and safety on site				
Have health and safety management plans including electrical, mechanical, structural and food safety been designed and implemented?				
Has the accommodation manager a duty to report to the health authority specific diseases, food poisoning or casualties?				
Is there an adequate number of staff/workers trained in providing first aid?				
Has a specific and adequate fire safety management plan been designed and implemented?				
Is guidance on alcohol, drug and HIV/AIDS and other health risk-related activities provided to workers?				
Are contraception measures (condoms in particular) and mosquito nets (where relevant) provided to workers?				
Do workers have an easy access to medical facilities and medical staff, including female doctors/nurses where appropriate?				
Have emergency plans on health and fire safety been prepared?				
Depending on circumstances, have specific emergency plans (earthquakes, floods, tornadoes) been prepared?				
Security on workers' accommodation				
Has a security plan including clear measures to protect workers against theft and attack been designed and implemented?				
Has a security plan including clear provisions on the use of force been designed and implemented?				
Have the backgrounds of security staff been checked for previous crimes or abuses?				
Has the recruitment of security staff from both genders been considered? Have security staff received clear instruction about their duty and responsibility?				
Have security staff been adequately trained in dealing with domestic violence and the use of force?				

	Y	N	N/A	Comments
Are body searches only performed in exceptional circumstances by specifically trained security staff of both genders?				
Do security staff have a good understanding about the importance of respecting workers' rights and the rights of the surrounding communities and adopt appropriate conduct?				
Do workers and communities have specific means to raise concerns about security arrangements and staff?				
Workers' rights, rules and regulations on workers' accommodation				
Are limitations on workers' freedom of movement limited and justified?				
Is an adequate transport system to the surrounding communities provided?				
Is the practice of withholding workers' ID papers prohibited?				
Is freedom of association expressly respected?				
Are workers' religious, cultural and social backgrounds respected?				
Are workers made aware of their rights and obligations and provided with a copy of the accommodations' internal rules, procedures and sanction mechanisms in a language or through a media they understand?				
Are house regulations non discriminatory, fair and reasonable?				
Are regulations on alcohol, tobacco and third parties' access to the camp clear and communicated to workers?				
Is a fair and non-discriminatory procedure to implement disciplinary procedures, including the right for workers to defend themselves, set up?				

	Y	N	N/A	Comments
Consultation and grievance mechanisms				
Have mechanisms for workers' consultation been designed and implemented?				
Are workers provided with processes and mechanisms to articulate their grievances in accordance with PS2/PR2?				
Have workers subjected to disciplinary proceedings arising from conduct in the accommodation had access to a fair and transparent hearing with the possibility to appeal the decision?				
Are there fair conflict resolution mechanisms in place?				
In cases where serious offences occur, are there mechanisms to ensure full cooperation with police authorities?				
Management of community relations				
Have community relation management plans addressing issues around community development, community needs, community health and safety and community social and cultural cohesion been designed and implemented?				
Do community relation management plans include the setting up of liaison mechanisms to allow a constant exchange of information and consultation of the surrounding communities?				
Is there a senior manager in charge of implementing the community relation management plan?				
Is there a senior manager in charge of liaising with the surrounding communities?				
Are the impacts generated by workers' accommodation periodically reviewed, mitigated or enhanced?				
Are community representatives provided with easy means to voice their opinions and lodge complaints?				
Is there a transparent and efficient process for dealing with community grievances, in accordance with PS1/PR10?				

Acknowledgements

"Workers' accommodation: processes and standards" is a joint publication of the EBRD and IFC, who co-commissioned Ergon Associates to research and draft the document.

EBRD team:
Environment and Sustainability Department: Alke Schmidt,
Michaela Bergman, Debbie Cousins, Frederic Giovannetti, Jeff Jeter
Editorial and Desktop Publishing: Natasha Treloar, Bryan Whitford

IFC team:
Environment and Social Development Department: Larissa Luy, Sofie Fleischer Michaelsen,
Diana Baird, Wenlei Zhou, Piotr Mazurkiewicz, Robert Gerrits.
Editorial: Anna Hidalgo

Ergon Associates team:
Jean-Baptiste Andrieu, Stuart Bell, Amber Frugte, Steve Gibbons

This version of the Guidance Note benefited from valuable input from a number of external parties including Mary Boomgard (OPIC), Melinda Buckland (BHP Billiton), Kerry Connor (Bechtel), Alan Fine (Anglo Gold Ashanti), George Jaksch (Chiquita), Birgitte B. Nielsen (IFU), Roberto Vega (Dole), Karin Verstralen (FMO), Petter Vilsted (Norfund) and Elizabeth Wild (BP). We would also like to thank all companies that agreed to contribute practical examples.

For more information please contact
EBRD Environment and Sustainability Department, European Bank for Reconstruction and Development (EBRD) One Exchange Square, London EC2A 2JN United Kingdom
Tel: +44 20 7338 6000
Email: environmentalandsocial@ebrd.com

IFC Environment and Social Development Department: International Finance Corporation, 2121 Pennsylvania Ave. NW, Washington, DC 20433, United States
Tel: +1 (202) 473 1000 Fax: +1 (202) 974 4349
Email: asksustainability@ifc.org

Appendix K

Traffic Management Plan

Traffic Management Plan

ACWA POWER SOLARRESERVE REDSTONE SOLAR THERMAL POWER PLANT

SolarReserve South Africa
December 2, 2015

TRAFFIC MANAGEMENT PLAN

AIM

The construction phase of the Project is expected to generate relatively high volumes of traffic thus making it essential to ensure traffic is managed in a manner that facilitates efficiency as well as ensuring the safety of personnel and the local community as well as the receiving environment. The impact expected will not be only limited to the Project Site, but will also require the management of traffic impacts expected along local road networks proposed as access routes to the Project Site.

The purpose of the Traffic Management Plan, is to ensure that traffic is managed in such a manner as to avoid and minimise traffic risks to, and impacts on the health and safety of local communities, any personnel on site and the receiving environment, during routine and non-routine circumstances. The requirements of the Traffic Plan is applicable to all persons working for or on behalf of Contractors during construction and operation which have been appointed to provide vehicles, machinery or drivers for the Project.

GENERAL ITEMS

A copy of the Construction Phase Logistics Plan will be included as a method statement.

A copy of the Traffic Management Plan kept on site by the ECO and will be applicable to all employees working at the Project Site. Subcontractors will also be required to comply with the Traffic Management Plan as issued for the Project.

LICENSING OF VEHICLES

All vehicles used for or on behalf of the Project will comply with the applicable traffic and transport licensing requirements (such as with regard to licensing requirements relating to the transportation of over-sized loads or hazardous materials, including hazardous waste).

All drivers of vehicles used during the Project construction and implementation phases shall have the requisite vehicle licenses to operate vehicles and/or machinery on Site or on any public roads.

All vehicles shall have valid roadworthy certificates and licenses.

Permits such as abnormal load permits will be applied for the EPC Contractor and copies submitted to the ECO for record purposes.

MAINTENANCE ACTIVITIES

All vehicles and machinery used for the Project during Construction and Operations will be maintained on a regular basis and repaired where necessary in order to ensure good working condition. Construction and passenger vehicles will be subject to regular inspections by an appropriately qualified mechanic following the commencement of the Project's construction phase.

All potential road hazards or vehicle defects which may render a vehicle or road unsafe for use will be subject to reporting and an investigation. Vehicles found to be nor roadworthy will not be used for any activities on site or by any personnel until the necessary repairs have been undertaken.

Roads constructed on the Project Site will be kept in good order.

- Road and stormwater management infrastructure on the Project Site will be maintained in accordance with the stormwater management plan as to ensure road safety on Site.
- Vegetation along road borders will be kept short in order to not impede visibility and to enable roads to function as firebreaks.
- Roads shall be treated either with chemical stabilisation or surface wetting procedures in order to mitigate dust impacts.
- If the utilisation of water to limit dust generation on roads is not possible for any reason, an appropriate dust suppressant will be utilised.

ROAD CONSTRUCTION AND USE

Existing roads must be used, wherever possible for providing access to the Project Site and related infrastructure. New internal roads will only be constructed where none exist and the relevant approvals have been acquired, as per the Final Layout Plan for the Project Site. As per the Biodiversity recommendations, multiple track internal roads is not prohibited, except where approved.

Where possible, internal road construction should be restricted to areas already disturbed on the Project Site. Environmental considerations must be taken into account when determining the alignment of internal roads to ensure the minimum amount of damage is cause to natural habitats.

Internal roads will be designed to ensure that (i) surface water run-off changes are avoided where possible, (ii) water velocity is managed to reduce possible erosion risk; and (iii) existing drainage pattern is not altered drastically.

No internal roads are to be constructed in the wetlands and stream, where feasible and duly permitted. Where stream crossings are required, the internal road shall remain in alignment with the existing tracks on site and will be subject to the necessary permits from the CA. If the latter is required the following conditions apply:

- Subject to WUL from the DWS if applicable;
- provision must be made for fauna with respect to migration routes, i.e. culverts;
- Road crossing to be designed as to minimise the impacts on the riparian areas;
- Culverts must be designed so as to allow free flow of water and must be maintained in good working order; and
- Compacted surfaces should be kept as narrow as possible, where possible and equipped with adequate stormwater management facilities.

TRAFFIC MANAGEMENT

Routing and direction of Traffic

Movement of all vehicles to and from the Project Site during construction and operations shall be along designated national, regional and local public roads. The most appropriate route for large Project vehicles (such as trucks and buses) transporting equipment, materials and employees (along public roads) to and from the Site shall be determined by a Traffic Engineer in coordination with the SE and Project Company.

A copy of the approved routes must be maintained on Site together with the Traffic Management Plan by the ECO and CER.

In the event heavy/abnormal loads will be transported to or from the Project Site efforts need to be made to co-ordinate these movements with local traffic authorities well in advance.

The Contractor (EPC and O&M) will be responsible for obtaining any and all permits and authorisation relating to the transportation of heavy/abnormal loads as well as where traffic disturbances will occur. Copies of the permits and authorisations need to be provided to the ECO for record purposes.

The route proposed for the transportation of equipment to and from the Project Site should, wherever possible, try to avoid urban and residential areas, or areas with high pedestrian traffic. No deviation from approved access routes will be allowed, unless roads forming part of the approved routes are closed or inaccessible. In this case, the Contractor will be required to address the route alteration with the relevant CA and amend permits where applicable.

In order to minimise the impact on commuters, construction related traffic will be restricted and where possible not take place during peak morning and afternoon traffic periods.

All conditions with respect to the Conditional Road Access Permit issued for the Project will be implemented by the Contractor. Records hereof will be managed by the ECO and SE.

Site access and traffic

In accordance with the Conditional Road Access Permit, the Contractor shall construct a designated site access to the Project Site to ensure safe entry and exit as well as to restrict access to the Project.

- Site access will be clearly sign posted.

The onsite internal and access roads will be subject to road-use safety requirements and will be designed as to reduce all possible impacts traffic may have on neighbouring landowners. The movement of all vehicles within the Project Site must be along designated internal roads, as authorised. Where possible, existing roads will be used.

Vehicular movements on site is restricted to 30km/h for construction vehicles and 40km/h for light vehicles and passenger vehicles. All persons working for and on behalf of the Contractors shall adhere to all speed limits applicable to public roads. Failure to adhere to the prescribed speed limits is an offence and disciplinary action may be taken by Project Company if necessary.

The Contractor is responsible for ensuring appropriate and relevant signage is conspicuously placed at appropriate locations along all access roads, internal roads, and public roads, in consultation with the relevant traffic authorities and the Access Road Permit Conditions to indicate the following:

- Road hazards i.e. loose gravel;
- speed limits;
- turning traffic;
- that caution should be taken by motorists or pedestrians;
- the Site access; and
- no-go areas for vehicles.

TRANSPORTATION OF MATERIALS AND EQUIPMENT

It is the responsibility of the Contractor to ensure:

- Equipment and/or materials transported to or from the Project Site is appropriately secured for transportation purposes.
- Excessive loading/overloading of all vehicles used for or on behalf of the Project is prohibited.
- All drivers employed by or on behalf of the Project shall be appropriately trained and have the requisite licenses.

ROAD SAFETY

Employees Safety

All persons working for or on behalf of the Project, being transported to and from the Project Site shall be safely accommodated in appropriate passenger vehicles.

Transportation of employees on the back of open trucks will be strictly prohibited.

All vehicles will be appropriately maintained at all times and will be prohibited to carry more passengers than the number of persons for whom seating accommodation is provided.

Designated pedestrian routes shall be demarcated where appropriate.

Vehicle and pedestrian safety shall be included in the Induction Training required to be provided by the Contractor.

Drivers shall be adequately trained in the recognition and avoidance of road hazards, vehicle maintenance and safety requirements.

Stakeholder engagement

The traffic safety procedures, transport routes and construction schedules intended to be applied during the construction phase shall be disclosed to the public prior to the commencement of construction activities.

The scope of engagement will be defined in a method statement to be submitted for approval to the ECO and Project Company and will provide information on the routes proposed for construction vehicles, grievance mechanism and emergency procedures.

MONITORING AND REVIEW

The Traffic Plan should be considered a dynamic implementation guide, and is subject to review and revision in order to ensure effective and relevant traffic management principles be implemented throughout the life of the Project.

Construction Phase

During the construction phase, the ECO alongside the SE, need to ensure that the measures implemented for onsite traffic management is relevant. This can be done via quarterly review of the Traffic Management Plan. However, in the event of an incident or accident, an investigation needs to be undertaken in order to determine if the Traffic Management Plan needs to be revised. This needs to be duly recorded and kept as part of the Site Documentation by the ECO.

Operational & Maintenance Phase

During this phase of Project implementation, an annual audit should be suffice by the CER, unless an accident or incident occurred, in which case an investigation will be initiated and the Traffic Management Plan reviewed in order to ensure the appropriate corrective measures is incorporated to prevent similar accidents and/or incidents in the future.

STAKEHOLDER COMMUNICATION

The Construction Phase Logistics Plan will include a section addressing stakeholder engagement to specifically address transportation related impacts that may occur with the conveyance of large scale infrastructure, equipment or materials for the Project. This Method Statement will be approved by the Project Company prior to construction and will be implemented by the relevant Contractor and Project Company dependent on the nature and scope of the required engagement. Copies of all documents referring to stakeholder liaisons need to be kept on record (preferably signed) and maintained. Stakeholders need to be informed of any large scale construction activities in advance and in writing. These communications need to be made available to the ECO during auditing.

Appendix L

Emergency Preparedness and Response Plan

Emergency Preparedness and Response Plan

ACWA POWER SOLARRESERVE REDSTONE SOLAR THERMAL POWER PLANT

SolarReserve South Africa
December 2, 2015

EMERGENCY PREPARENDENSS AND RESPONSE PLAN

PURPOSE

The purpose of the Emergency Preparedness and Response Plan is:

- To assist contractor personnel to prepare for and respond quickly and safely to emergency incidents, and to establish a state of readiness which will enable prompt and effective response to possible events.
- To control or limit any effect that an emergency or potential emergency may have on site or on neighbouring areas;
- To facilitate emergency response and to provide such assistance on the site as is appropriate to the occasion;
- To ensure communication of all vital information as soon as possible;
- To facilitate the reorganisation and reconstruction activities so that normal operations can be resumed;
- To provide for training so that a high level of preparedness can be continually maintained.

This plan outlines response actions for potential incidents of any size. It details response procedures that will minimise potential health and safety hazards, environmental damage, and clean-up efforts. The plan has been prepared to ensure quick access to all the information required in responding to an emergency event. The plan will enable an effective, comprehensive response to prevent injury or damage to the construction personnel, public, and environment during the project. Contractors are expected to comply with all procedures described in this document. A Method Statement should be prepared at the commencement of construction detailing how this plan is to be implemented as well as details of relevant responsible parties for the implementation. The method statement must also reflect conditions of the IFC PS1 and include the following:

- Identification of areas where accidents and emergency situations may occur;
- Communities and individuals that may be impacted;
- Response procedure;
- Provisions of equipment and resources;
- Designation of responsibilities;
- Communication; and
- Periodic training to ensure effective response to potentially affected communities.

PROJECT-SPECIFIC DETAILS

The Project Company proposes to construct and operate a Concentrated Solar Power (CSP) Plant, known as the ACWA Power SolarReserve Redstone Solar Power Thermal Plant, on the Remaining Portion of the Farm 469, east of Postmasburg in the Northern Cape Province. The Project involves the construction and operation of a (CSP) Plant that uses a central receiver with molten salts storage technology as well as its associated infrastructure. Due to the scale and nature of this development, it is anticipated that the following risks could potentially arises during the construction and operational phases:

- Fires;
- Leakage of hazardous substances;
- Storage of flammable materials and substances;
- Flood events and overflow of wastewater retention dam;
- Accidents; and
- Natural disasters.

EMERGENCY RESPONSE PLAN

There are three levels of emergency as follows:

- Local Emergency: An alert confined to a specific locality.
- Site Emergency: An alert that cannot be localised and which presents danger to other areas within the site boundary or outside the site boundary.
- Evacuation: An alert when all personnel are required to leave the affected area and assemble in a safe location.

If there is any doubt as the whether any hazardous situation constitutes an emergency, then it must be treated as an Evacuation.

Every effort must be made to control, reduce or stop the cause of any emergency provided it is safe to do so. For example, in the event of a fire, isolate the fuel supply and limit the propagation of the fire by cooling the adjacent areas. Then confine and extinguish the fire (where appropriate) making sure that re-ignition cannot occur; for a gas fire it is usually appropriate to isolate the fuel and let it burn itself out but keep everything around the fire cold.

1.1. EMERGENCY SCENARIO CONTINGENCY PLANNING

1.1.1. Scenario: Spill which would result in the contamination of land, surface or groundwater

i. Spill Prevention Measures

Preventing spills must be the top priority at all operations which have the potential of endangering the environment. The responsibility to effectively prevent and mitigate any scenario lies with the Contractor and the Environmental Manager. In order to reduce the risk of spills and associated contamination, the following principles should be considered during construction and operation activities:

» All equipment refuelling, servicing and maintenance activities should only be undertaken within appropriately sealed designated areas.

» All maintenance materials, oils, grease, lubricants, etc. should be stored in a designated area in an appropriate storage container.

- No refuelling, storage, servicing, or maintenance of equipment should take place within 50m of drainage lines or sensitive environmental resources in order to reduce the risk of contamination by spills.
- No refuelling or servicing should be undertaken without absorbent material or drip pans properly placed to contain spilled fuel.
- Any fluids drained from the machinery during servicing should be collected in leak-proof containers and taken to an appropriate disposal or recycling facility.
- If these activities result in damage or accumulation of product on the soil, the contaminated soil must be disposed of as hazardous waste. Under no circumstances shall contaminated soil be added to a spoils pile and transported to a regular disposal site.
- Chemical toilets used during construction must be regularly cleaned. Chemicals used in toilets are also hazardous to the environment and must be controlled. Portable chemical toilets could overflow if not pumped regularly or they could spill if dropped or overturned during moving. Care and due diligence should be taken at all times.
- Contact details of emergency services and HazMat Response Contractors are to be clearly displayed on the site. All staff are to be made aware of these details and must be familiar with the procedures for notification in the event of an emergency.

ii. Procedures

The following action plan is proposed in the event of a spill:

1. Spill or release identified.
2. Assess person safety, safety of others and environment.
3. Stop the spill if safely possible.
4. Contain spill to limit entering water bodies and surrounding areas.
5. Identify substance spilled.
6. Quantify spill (under or over guideline/threshold levels).
7. Notify Site Manager and emergency response crew and authorities (in event of major spill).
8. Inform users (and downstream users) of potential risk.
9. Clean up of spill using spill kit or by HazMat team.
10. Record of spill incident on company database.

a) Procedures for containing and controlling the spill (i.e. on land or in water)

Measures can be taken to prepare for quick and effective containment of any potential spills. Each contractor must keep sufficient supplies of spill containment equipment at the

construction sites, at all times during and after the construction phase. These should include specialised spill kits or spill containment equipment. Other spill containment measures include using drip pans underneath vehicles and equipment every time refuelling, servicing, or maintenance activities are undertaken.

Specific spill containment methods for land and water contamination are outlined below.

Containment of Spills on Land

Spills on land include spills on rock, gravel, soil and/or vegetation. It is important to note that soil is a natural sorbent, and therefore spills on soil are generally less serious than spills on water as contaminated soil can be more easily recovered. It is important that all measures be undertaken to avoid spills reaching open water bodies. The following methods could be used:

» *Dykes*

Dykes can be created using soil surrounding a spill on land. These dykes are constructed around the perimeter or down slope of the spilled substance. A dyke needs to be built up to a size that will ensure containment of the maximum quantity of contaminant that may reach it. A plastic tarp can be placed on and at the base of the dyke such that the contaminant can pool up and subsequently be removed with sorbent materials or by pump into barrels or bags. If the spill is migrating very slowly, a dyke may not be necessary and sorbents can be used to soak up contaminants before they migrate away from the source of the spill.

» *Trenches*

Trenches can be dug out to contain spills. Spades, pick axes or a front-end loader can be used depending on the size of trench required. Spilled substances can then be recovered using a pump or sorbent materials.

Containment of Spills on Water

Spills in water can negatively impact water quality and aquatic life. All measures need to be undertaken to contain spills on open water. The following methods could be used:

» *Weirs*

Weirs can be used to contain spills in streams and to prevent further migration downstream. Plywood or other materials found on site can be placed into and across the width of the stream, such that water can still flow under the weir. Weirs are however only effective for spilled substances which float on the water surface.

» *Barriers*

In some situations barriers made of netting or fence material can be installed across a stream, and sorbent materials placed at the base to absorb spilled substance. Sorbents will need to be replaced as soon as they are saturated. Water will be allowed to flow through.

b) Procedures for transferring, storing, and managing spill related wastes

Used sorbent materials are to be placed in plastic bags for future disposal. All materials mentioned in this section are to be available in the spill kits. Following clean up, any tools or equipment used must be properly washed and decontaminated, or replaced if this is not possible.

Spilled substances and materials used for containment must be placed into empty waste oil containers and sealed for proper disposal at an approved disposal facility.

c) Procedures for restoring affected areas

Criteria that may be considered include natural biodegradation of oil, replacement of soil and revegetation. Once a spill of reportable size has been contained, the ECO and the relevant Authority must be consulted to confirm that the appropriate clean up levels are met.

1.1.2. Scenario: Fire (and fire water handling)

i. Action Plan

The following action plan is proposed in the event of a fire:

1. Quantify risk
2. Assess person safety, safety of others and environment
3. If safe – attempt to extinguish fire using appropriate equipment
4. If not safe to extinguish, contain fire
5. Notify Site Manager and emergency response crew and authorities
6. Inform users (and downstream users) of potential risk of fire
7. Record of incident on company database

ii. Procedures

Because large scale fires may spread very fast in the environment it is most advisable that the employee/contractor not put his/her life in danger in the case of an uncontrolled fire.

Portable firefighting equipment must be provided in line with the Building Code of South Africa and the relevant provincial building code. All emergency equipment including portable fire extinguisher, hose reels, hydrants must be maintained and inspected by a qualified contractor in accordance with the relevant legislation and National standards.

Current evacuation signs and diagrams for the building or site that are compliant to relevant state legislation must be provided in a conspicuous position, on each evacuation route. Contact details for the relevant emergency services should be clearly displayed on site and all employees should be aware of procedures to follow in the case of an emergency.

a) Procedures for initial actions

Persons should not fight the fire if any of the following conditions exist:

» They have not been trained or instructed in use of a fire extinguisher.
» They do not know what is burning.
» The fire is spreading rapidly.
» They do not have the proper equipment.
» They cannot do so without a means of escape.
» They may inhale toxic smoke.

b) Reporting procedures

» Report fire immediately to the site manager, who will determine if it is to be reported to the relevant emergency services and authorities.
» The site manager must have copies of the Report form to be completed.

1.1.3. Scenario: Flood events and overflow of water retention dam

i. Action Plan

The following action plan is proposed in the event of a flood or overflow of water retention dam:

1. Identify flood state or overflow
2. Assess personal safety, safety of others and environment
3. Identify source
4. Stop the source of water(waste) causing overflow if safely possible
5. Contain overflow water to limit it entering surrounding water bodies
6. Quantify overflow
7. Notify Site Manager and emergency response crew and authorities
8. Inform users (and downstream users) of potential risk
9. Record of incident on company database

ii. Flood/overflow Effect Prevention Measures

Preventing flood/ overflowing of wastewater retention dam must be a top priority. The responsibility to effectively prevent and mitigate any scenario

lies with the Contractor and the Environmental Manager. All parties are expected to:

» Always conduct proper maintenance and inspections on the area and machinery/vehicles.
» Never allow for the risk of over flowing, especially in or near sensitive areas.
» Know the limits of the wastewater dam/s.
» Store all materials in protected areas.

Restrictions must be placed on amounts of wastewater to be pumped into the dam. All technical detail as to capacity and limitations of the facility must be made extremely clear to reduce the potential of contamination.

iii. Procedures

Although attempts can be made to minimise the effects of flooding, it is impossible to prevent floods altogether. Being prepared for flooding and having emergency plans must therefore be a priority.

a) Procedures for initial actions

» Ensure safety of all personnel.
» Assess hazards and risks.
» Stop the flood/overflow if safely and physically possible, e.g. shut off pump.
» No matter what the volume is, notify site manager.
» Contain the wastewater.

b) Reporting procedures

» Report immediately to the site manager, who will determine if it is to be reported to the relevant emergency services and authorities.
» The site manager, will have copies of the Report form to be completed.

c) Procedures for containing and controlling overflow of wastewater retention dam

Measures can be taken to prepare for quick and effective containment of any potential overflow.

Initiate overflow containment by first determining what will be affected by the incident.

» Assess speed and direction of overflow and cause of movement (water, wind and slope).
» Determine best location for containing wastewater, avoiding any water bodies.
» Have a contingency plan ready in case event worsens beyond control or if the weather or topography impedes containment.

d) Procedures for transferring, storing, and management.

Following clean up, any tools or equipment used will be properly washed and decontaminated, or replaced if this is not possible. All materials used for containment of spilled wastewater must be placed into empty waste oil containers and sealed for proper disposal at an approved disposal facility.

SUMMARY: RESPONSE PROCEDURE

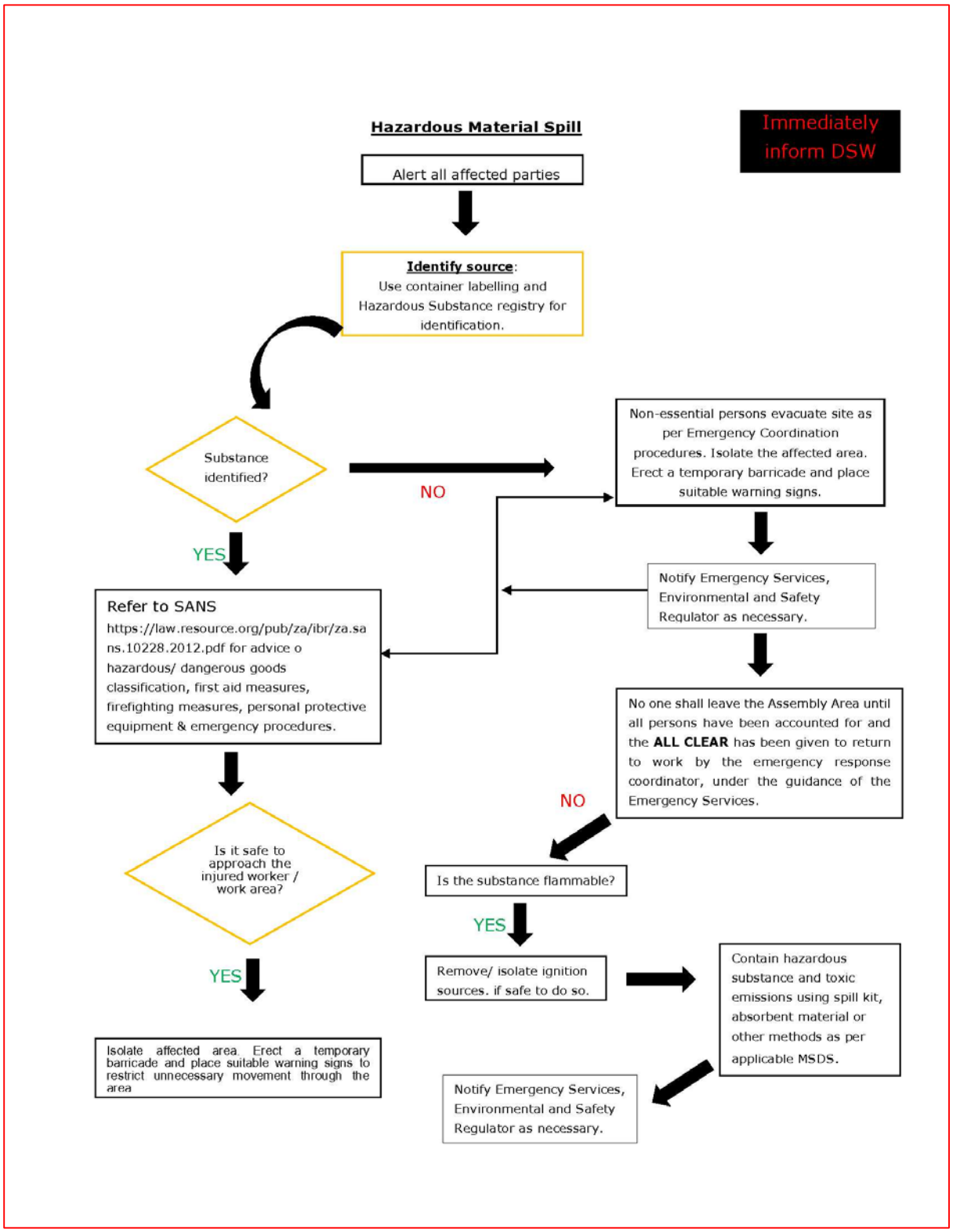

Figure 1: Hazardous Material Spill

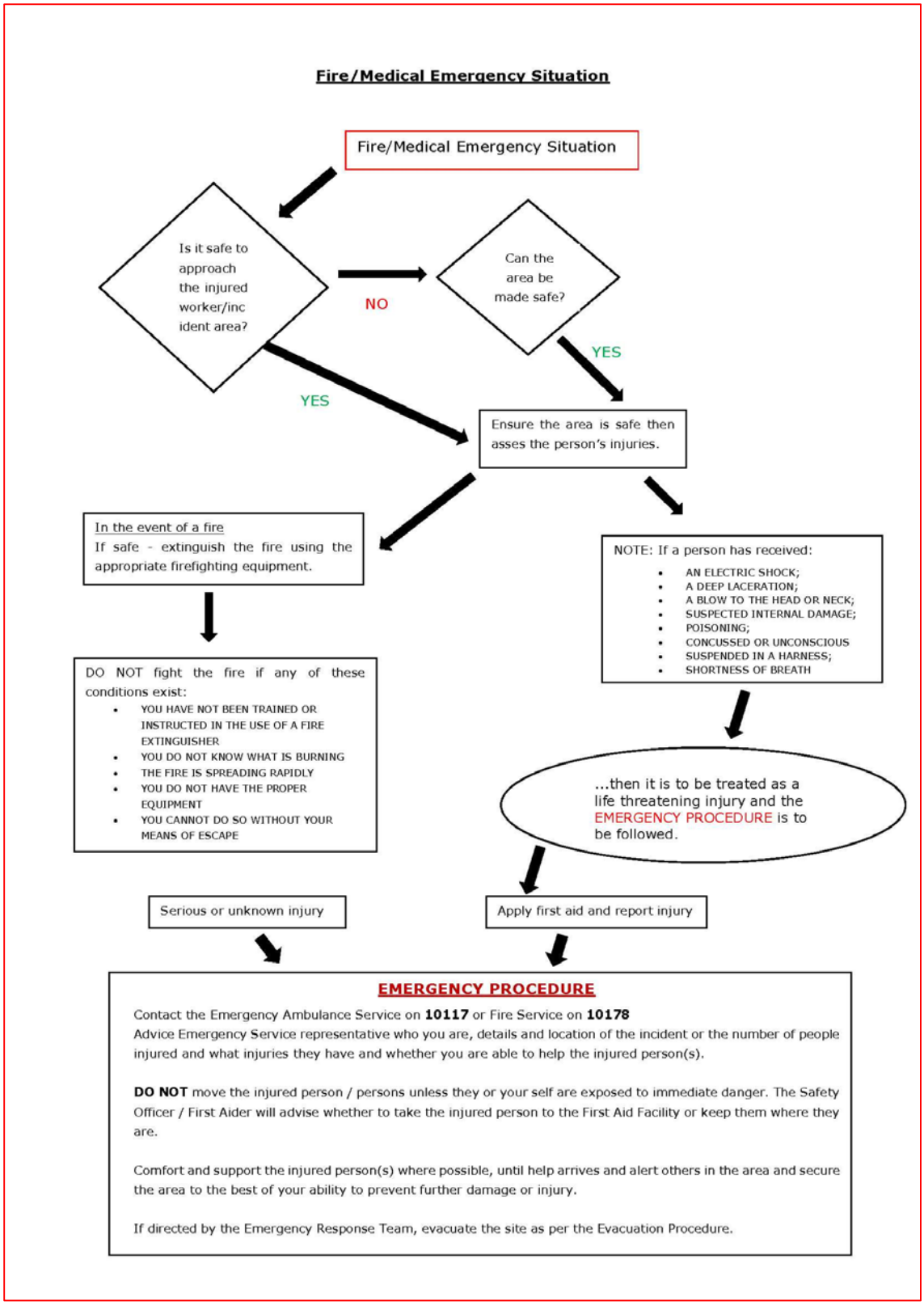

Figure 2: Emergency Fire/Medical

Appendix M

CV's of EMPr Author and Reviewer

From the desk of Karen Jodas
E-mail: karen@savannahSA.com

Savannah
ENVIRONMENTAL (PTY) LTD

4 December 2015

ACWA Power SolarReserve Redstone Solar Thermal Power Plant (RF) (Pty) Ltd
Office XX07001
90 Grayston Drive
Sandton
2196

Attention: Alistair D. Jessop

REVISION 2 OF THE ENVIRONMENTAL MANAGEMENT PROGRAMME FOR THE ACWA POWER SOLARRESERVE REDSTONE SOLAR THERMAL POWER PLANT NEAR POSTMASBURG, NORTHERN CAPE PROVINCE
DEA REF NO.: 12/12/20/2316 AM1-6

Dear Sir

Savannah Environmental (Pty) Ltd, as Independent Environmental Practitioners (EAP) have been appointed by ACWA Power SolarReserve Redstone Solar Thermal Power Plant (RF) (Pty) Ltd to review Revision 2 of the Final Environmental Management Programme (EMPr) dated December 2015, the final facility layout, and the environmental plans appended to the EMPr.

Savannah Environmental has undertaken a review, and are of the opinion that the content of the EMPR Revision 2, the final facility layout and the environmental plans provided by ACWA Power SolarReserve Redstone Solar Thermal Power Plant (RF) (Pty) Ltd meet the requirements of the Environmental Authorisation (EA) dated 6 August 2012. The Conditions of the EA, the final Environmental Impact Assessment Report, the specialists recommendations provided in the specialist reports have been incorporated in the EMPr. The Ecological Walkdown Assessment informed the final layout and the recommendations provided by the specialist have been incorporated into the EMPr Revision 2.

Please do not hesitate to contact me if you have any queries in this regard.

Kind regards

Karen Jodas
Director
Savannah Environmental (Pty) Ltd

UNIT 10, BUILDING 2, 5 WOODLANDS DRIVE OFFICE PARK, CNR. WOODLANDS DRIVE & WESTERN SERVICE ROAD, WOODMEAD, JOHANNESBURG
PO BOX 148, SUNNINGHILL, 2157, GAUTENG
TEL: +27 (0)11 656 3237 • FAX: +27 (0)86 684 0547 • E-MAIL: INFO@SAVANNAHSA.COM
WWW.SAVANNAHSA.COM

DIRECTORS: KM JODAS • J THOMAS • M MATSABU
COMPANY REGISTRATION NO.: 2006/000127/07
VAT REGISTRATION NO.: 4780226736

CURRICULUM VITAE
TEBOGO MAPINGA

Profession : Senior Environmental Consultant for Savannah Environmental Consultants
Specialisation : Environmental Management
Years of experience : 8 years

KEY RESPONSIBILITIES

- Project Management and client liaison;
- Report writing and review;
- Compliance monitoring and audit reporting;
- Development of Proposals; and
- Staff monitoring.

SKILLS BASE AND CORE COMPETENCIES

- Report Writing, drafting proposals and tenders;
- Negotiating skill;
- Problem solving;
- Financial management and marketing;
- Compliance advice for financial closure project;
- Understanding of all Environmental Legislation (NEMA, NEM:BA, NEM:WA, NEM:AQA, NEM:PAA, etc) and all other relevant legislation;
- Ability to work independently and in a team;
- Verbal, written and good presentation skills;
- Time management and workload management;
- Facilitation skills; and
- Organizational, planning and analytic skills.

EDUCATION AND PROFESSIONAL STATUS

Degrees:

- *Bsc Degree: The University of Limpopo, 2006; and*
- *Honours in Environmental Management: University of South Africa (in progress).*

Courses:

- Computer Literacy Course: University of Limpopo, 2005; and
- Environmental Impact Assessment Training: University of Pretoria, 2012.

Professional Society Affiliations:

- ***N/A***

EMPLOYMENT HISTORY

Environmental Practitioner/ Project Manager: Phaki Phakanani Environmental Consultants (January 2007 - March 2008) Tasks include:

- Training of junior staff;
- Client Liaison;

- Project co-ordination and facilitation;
- Managing specialists;
- Report writing and presentations;
- Compiling Environmental Impact Assessment Reports (Basic and Scoping/EIA Report); and
- Facilitating the Public Participation Process.

Environmental Manager: SEF (1 April 2008 – 30 February 2009) Tasks include:

- Compilation of Environmental Scoping Reports, Plan of Study, Environmental Impact Assessments, Basic Assessments and Environmental management plans;
- Co-ordination of the public participation process;
- Project management, including specialists and other team members;
- Development of terms of reference, project proposals and tenders; and
- Client liaison.

Environmental Project Manager: SEF (1 March 2009 until 31 April 2010) Tasks include:

- Compilation of Environmental Scoping Reports, Plan of Study, Environmental Impact Assessments, Basic Assessments and Environmental management plans;
- Co-ordination of the public participation process;
- Project management, including specialists and other team members;
- Development of terms of reference, project proposals and tenders;
- Client liaison;
- Marketing; and
- Financial Management of projects.

Environmental Officer Specialist production: Department of Environmental Affairs (1 April 2010 until 1 June 2013) Tasks include:

- Process EIA applications submitted to DEA within the stipulated legislated time frames;
- Implement the SID and ERP EIA guideline;
- Provide technical input into Appeal Response Report's (ARR's);
- Support Regulatory Services with compliance monitoring and enforcement;
- Implement DEA and Public Entity EIA forums; and
- Provide technical input into CD: IEA correspondence.

Environmental Scientist: GIBB Engineering and Science (Mega Projects) (1June 2013- 31 March 2014) Tasks include:

- Re-writing the Revised Draft EIR Version 2 Eskom Nuclear-1 EIA; and
- Liaison with the client and specialists.

PROJECT EXPERIENCE

ENVIRONMENTAL IMPACT ASSESSMENTS AND PUBLIC PARTICIPATION

- Gunstfontein Wind Energy Facility (2015)
- Sirius Phase One Solar PV Facility (All work required to reach financial close- permitting);
- Nxuba Wind Farm (2015)- (All work required to reach financial close- permitting);
- Karusa Wind Farm (2015)- (All work required to reach financial close- permitting);
- Soetwater Wind Farm (2015) - (All work required to reach financial close- permitting);
- Richards Bay Biomas EIA (2015);
- Upington Two CSP Facility (2015);
- Wesley Peddie Power Line Basic Assessment (2015);
- Pofadder Wind (3 Phases) and Solar Energy Facilities (2014-2015);
- Pofadder Power Line Basic Assessment Application (4 BAR's) (2014-2015)
- Castle Wind Energy Facility (2014-2015)
- Spitskop Wind Energy Facility (2014-2015);
- Bobididi Solar Facility-Environmental Screening (2014);
- Son Sitrus Solar Energy Facility (2014);
- Nuclear- 1 EIA (2013);
- Langkuil Industrial Development, 2008 (Environmental Manager and Project Manager);
- Township Development in Reitfontein, 2008/2009;
- Upgrading of the BP Golf Course, 2008;
- Construction of the BP Soshanguve VV Filling Station, 2008;
- Construction of the BP Soshanguve ZZ Filling Station, 2008;
- Shell Filling Stations(Project Manager and Client Liaison), 2008/ 2009:
- Watloo Filling Station
- Chantelle Filling Station
- M2 East Filling Station
- Orlando Filling Station
- Equestria Willowglen Filling Station
- President Park Filling Station
- Capital Park;
- Eskom- Komati Water Augmentation, 2008;
- Rainbow Junction Residential Development, 2008/ 2009;
- Township Development in Delmore Park Extension 7, 2008/ 2009;
- West Rand District Municipality- Bulk Water Supply 2009;
- West Rand District Municipality Air Quality Assessment;
- Lonmin K4 Shaft Mine Upgrading;
- Westlake Residential Development;
- Air Quality Management Plan;
- Montana Spruit Upgrading;
- Palm Ridge Township Development;
- HM Pitjie Roads;
- Vlaakplat S24G Application (Mokgale City Local Municipality);
- Rangeview Ext 2 S24G Application (Mogale City Local Municipality);

- Construction of Khetho Bridge, Greater Giyani Local Municipality, 2007;
- Demolition and Relocation of Malamulele High School, 2007;
- Construction of Malamulele Shopping Complex, 2007;
- The Subdivision of land in Ellisrus, 2007;
- Construction of the Senwabarwane Filling Station, 2007;
- Residential Development in Tlapeng Village, 2007;
- Township Development in Maphosa Village, 2007;
- Establishment of a Piggery in Mogalakwena Local Municipality, 2007;
- Establishment of two Piggeries in Elias Motsoaledi Local Municipality, 2007;
- Establishment of a Piggery in Modimolle Local Municipality, 2007;
- Township Development in Rietfontein, 2007;
- Public Participation and Section 24G Application for the National Taxi Scrapping Project, 2007;
- Construction of a Shopping Complex in Zebediela, 2007;
- Establishment of a Guest House (ECA application), 2008;
- Establishment of a Waste Management Depot in Rustenburg, 2008; and
- Establishment of a Waste Management Depot in Tzaneen and Nkowa-Nkowa, 2008.

CURRICULUM VITAE **Leanna Rautenbach**		

PERSONAL INFORMATION	
Full Names	Cecelia Johanna (Leanna) Rautenbach

CAREER PROGRESSION

April 2015 - Current	**Director – Development, Africa**	**SolarReserve SA (Pty) Ltd** [Office L11-C, 11th Floor, Sinosteel Plaza, 159 Rivonia Road, Sandton]

Responsibilities:

1. Identify and secure new projects in the Southern African region as well as supporting development activities in other regions as required by the Company.
2. Development of existing and new CSP and PV projects.
3. Sign off on all project related environmental assessments and related reports.
4. Lead all permitting related activities -
   - Project management
   - Budgeting
   - Secure valid grid connections,
   - Secure necessary land,
   - Secure water permits,
   - Community and stakeholder management and communications liaison;
   - Environmental Permitting/Consents;
   - Land use permitting;
   - Transport/logistics permitting
   - Non-resource financing, and
   - Any and all other permit as may be required.
5. Internal legal due diligence on all permits, land and environmental, with respect to project requirements versus legislative and Bid Programme requirements.
6. Compliance of the Project in terms of all relevant environmental and land legislation.
7. Project Development Team Leader – management of all facets related to the inception, development and obtainment of required permits for a project to legally operate in the South African and African environment.
8. Bid coordination, compilation lead to national programmes and/or any other tender programmes.

May 2013 – April 2015	**Development Manager – Development, Africa**	**SolarReserve SA (Pty) Ltd** [Office L11-C, 11th Floor, Sinosteel Plaza, 159 Rivonia Road, Sandton]

1. Assist with the identification of new projects in the Southern African region as well as supporting development activities in other regions as required by the Company.
2. Development of existing and new CSP and PV projects
3. Review of all environmental reports drafted for and on behalf of the Company
4. Assist with and facilitate the Project Development scope
   - Identification and securing necessary land,
   - Liaising with landowners
   - Secure water permits,
   - Environmental permitting
   - Land use permitting
   - Transport/logistics permitting
   - Non-resource financing, and
   - Any and all other permit as may be required.
5. Internal legal due diligence on all projects.
6. Bid assistance to national programmes and/or any other tender programmes.

CAREER PROGRESSION

2011 – April 2013	**Environmental Assessment Practitioner**	**WorleyParsons RSA (Pty) Ltd,** [PO Box 36155, Menlo Park, 0102]

WorleyParsons acquired 70% of the shareholding of KV3 Engineers on 14 January 2011. As a result of the acquisition KV3 Engineers changed its name to WorleyParsons RSA (Pty) Ltd.)

Responsibilities:

1. Preparing of proposals for clients & tender processes.
2. Undertaking of Environmental Impact Assessments
   - Undertaking of Scoping assessments, EIA & BA's
   - Specialist liaison
   - Technical support
   - Reporting
   - Project management - Contract & project supervision
   - Project budgeting & financial management.
   - Liaise with stakeholders, interested and affected parties.
3. Development of environmental policy, best practice guidelines, standardising of EIA process.
4. The implementation of best practice and company standards,
5. Legal compliance & due diligence
6. Capability in conducting independent investigations as well as integrating information from across disciplines.
7. Compliance Auditing

2009 - 2011	**Environmental Assessment Practitioner**	**KV3 Engineers** [PO Box 36155, Menlo Park, 0102]

Experience was gained as an Environmental Assessment Practitioner where I was responsible for facilitating and managing specialist consultants, the Environmental Authorization process as per the National Environmental Management Act and associate regulations. Also assisted with the compilation and quality assurance for socio-economic assessments and the facilitation of Public meetings. Gained valuable practical experience in terms of environmental compliance auditing and monitoring as an environmental compliance officer (ECO).

May 2008 – 2009	**Environmental Coordinator: ISO 14001 Coordinator**	**EASTPLATS** [Hartbeespoort Dam, South Africa]

Responsibilities:

Working at Eastern Platinum Mines Ltd, I gained experience in the construction and operation of the ISO 14001: 2004 Environmental Management Systems. Assisted with various environmental tasks, pertaining to managing specialists, implementing environmental systems and procedures as well as compliance audits. assisted with the compilation of Closure Cost Liability, and Closure Plans, the implementation of environmental management plans and water monitoring.

1. Contractor & project supervision;
2. Review & management of Environmental Management System (EMS);
3. Overseeing of daily activities i.e. waste management, tailings storage facility management;
4. Development of environmental policy, best practice guidelines, standard operating procedures and works instruction in line with ISO 14001:2004 standards;
5. Implementation of best practice & company standards, ;
6. Legal Compliance & Due Diligence;
7. Liaise with stakeholders, interested & affected parties

EDUCATION

2012	**Certificate:** Project Management Certification	**CESA - SQDC** [Pretoria, South Africa]
2011	**Certificate:** Annual Environmental Law Workshop: Green Gain Consulting (Pty) Ltd	**Green Gain Consulting** [Pretoria, South Africa]

EDUCATION		
2010	**Certificate:** Introduction to Environmental Impact Assessment: Wits Commercial Enterprise (Pty) Ltd	**Wits Commercial Enterprises** [Johannesburg, South Africa]
2009	**Certificate:** Annual Environmental Law: Green Gain Consulting (Pty) Ltd	**Green Gain Consulting** [Pretoria, South Africa]
2009	**Certificate:** Environmental Impact Assessment and Beyond: International Association for Impact Assessment	[Pretoria, South Africa]
2008	**Certificate:** Understanding and Implementing Environmental Law	**Implex** [Johannesburg, South Africa]
2008	**Certificate:** Greenhouse Gas Emissions Reduction Strategies	**University of the North West** Marcus Evans [Johannesburg, South Africa]
2008	**Certificate:** Introduction to Sustainable Environmental Management	**University of the North West** Centre for Environmental Management [Potchefstroom, South Africa]
2008	**Certificate:** ISO 14001 Accreditation - EMS – Understanding ISO 14001 - EMS – SAATCA Auditing Examination	**South African Standards Bureau** [Pretoria, South Africa]
2003 - 2005	**Degree:** B Commerce Economics and Tourism	**University of the North West** [Potchefstroom, South Africa]
1997 – 2001	**National Senior Certificate:** Matriculation with Exemption	**Wesvalia High School** [Klerksdorp, South Africa]

WorleyParsons

resources & energy

Cecelia Johanna Rautenbach

Environmental Assessment Practitioner

Curriculum Vitae

Name	Cecelia Johanna Rautenbach
Date of Birth	13/11/1983
Identity Number	8311130009080
Tertiary Qualification	BCom (Economics/Tourism), North-West University, 2006
Professional Membership	Member: International Association for Impact Assessment South Africa (2570) (01/08/2009)
Name & Contact Details of Current Employer	WorleyParsons RSA (Pty) Ltd, PO Box 36155, Menlo Park, 0102 **Tel:** +27 (0) 12 425 6300 **Fax:** +27 (0) 12 460 1336 **Email:** Leanna.rautenbach@worleyparsons.com
Date of Joining Firm	08/05/2009

Summary of Employment

2011 - Current	Environmental Scientist, WorleyParsons RSA (Pty) Ltd
2009 - 2011	Environmental Scientist, Kwezi V3 Engineers (Pty) Ltd
2008 - 2009	Environmental Co-ordinator, Eastern Platinum Mines Ltd
2006 - 2008	Development Economist, Urban-Econ Development Economists

Technical Experience

Leanna Rautenbach is an Environmental Scientist with 3 years' practical experience in environmental co-ordination, management and assessment as well as 2.5 years' experience in development economics. Although a trained Development Economist she has gained extensive experience in the field of environmental science whilst employed as an Environmental Coordinator at a platinum mine in the North West Province.

During her employment as a Development Economist at Urban-Econ: Development Economists, experience was gained in the field of project management i.e. the planning phases, financial control, strategy and project delivery phases, as well as the fields of economic and socio-economic impact assessments.

Leanna Rautenbach has experience in the undertaking and facilitation of environmental impact assessment, the compilation of comprehensive environmental management plans, managing project teams and specialists, reviewing specialist reports, client and authority liaison as well as Public Participation and PR. Leanna furthermore has extensive experience as an Environmental Control Officer, monitoring and auditing environmental compliance for several projects currently.

Leanna Rautenbach has in the last couple of years been active in the field of environmental management pertaining to Power Development and Projects, more in particular Renewable Energy. For the last two years she has been involved in a range of solar energy projects, both CSP and PV technologies. This has meant dealing with projects where only Basic Assessments are required to full environmental impact assessments (EIAs). Leanna has furthermore obtained valuable experience in writing and implementing environmental management plans (EMPs) for construction, operation and decommissioning of these type of developments.

Undertaking EIAs has involved the development of a number of skills, including the ability to analyse the environment in a holistic manner, while evaluating options and trade-offs; to undertake scoping and stakeholder participation; undertake assessment of impacts, and evaluation of their potential significance; to recommend mitigation, management and monitoring of impacts; and to manage, coordinate and integrate the findings of an interdisciplinary team.

Leanna's personal responsibilities on these renewable energy projects have included drafting of proposals, project and financial management of projects, management of specialist teams, integration of specialist findings and compilation of reports and project management.

2011 - Current **WorleyParsons RSA (Pty) Ltd**

(WorleyParsons acquired 70% of the shareholding of KV3 Engineers on 14 January 2011. As a result of the acquisition KV3 Engineers changed its name to WorleyParsons RSA (Pty) Ltd.)

2009 - 2011 **Kwezi V3 Engineers (Pty) Ltd**

Experience was gained as an Environmental Assessment Practitioner where she was responsible for facilitating and managing specialist consultants, the Environmental Authorization process as per the National Environmental Management Act and associate regulations. She also assisted with the compilation and quality assurance for socio-economic assessments and the facilitation of Public meetings. She gained valuable practical experience in terms of environmental compliance auditing and monitoring as an environmental compliance officer (ECO).

2008 - 2009 **Eastern Platinum Mines Ltd**

Working at Eastern Platinum Mines Ltd Leanna gained experience in the construction and operation of the ISO 14001: 2004 Environmental Management Systems. She assisted with various environmental tasks, pertaining to managing specialists, implementing environmental systems and procedures as well as compliance audits. During her employment she assisted with the compilation of Closure Cost Liability, and Closure Plans, the implementation of environmental management plans and water monitoring.

2006 - 2008 **Urban-Econ Development Economists**

She gained experience in the conducting of Socio-Economic Assessments, Economic Assessments, Business Plan compilation and economic sectoral analysis. She furthermore liaised with clients and the public through the facilitation of meetings. Expertise includes the capture and reworking of data, the interpretation of data and the formulation of strategies as per the specific scope of work.

Courses, Conferences and Seminars

2012 Project Management Certification

2011 Annual Environmental Law Workshop: Green Gain Consulting (Pty) Ltd

2010 Introduction to Environmental Impact Assessment: Wits Commercial Enterprise (Pty) Ltd

2009 Annual Environmental Law: Green Gain Consulting (Pty) Ltd

2009 Environmental Impact Assessment and Beyond: International Association for Impact Assessment

2008 Southern African Auditor and Training Certification Association Examination ISO 14001: 2004: South African Bureau of Standards Training Centre

2008 Environmental Management Systems Understanding ISO 14001: 2004: South African Bureau of Standards Training Centre

2008 Introduction to Environmental Management: University North West

2008 Understanding and Implementing Environmental Legislation: Premier Conferencing/Implex Legal Solutions

2008 Greenhouse Gas Reduction Strategies: Marcus Evans

Language Proficiency

	Speak	Read	Write
Afrikaans	Excellent	Excellent	Excellent
English	Excellent	Excellent	Excellent

WorleyParsons

resources & energy

Johannes Cornelius Pretorius

Senior Environmental Scientist

Curriculum Vitae

Name	Johannes Cornelius Pretorius
Date of Birth	26/03/1978
Identity Number	7803265031088
Tertiary Qualification	BSc (Hons), University of Potchefstroom, 2001 BA (Geography), University of Potchefstroom, 2000
Professional Membership	International Association for Impact Assessment South Africa (# 2365)
Name & Contact Details of Current Employer	WorleyParsons RSA (Pty) Ltd, PO Box 22, Menlo Park, 0102 **Tel:** +27 (0) 12 745 2000 **Fax:** +27 (0) 12 745 2001 **Email:** Jc.pretorius@worleyparsons.com
Date of Joining Firm	01/05/2011

Summary of Employment

2011 - Current	Senior Environmental Scientist, WorleyParsons RSA (Pty) Ltd
2009 - 2011	Environmental Specialist, Aurecon
2007 - 2009	Senior Environmental Scientist, TWP-Environmental Services
2005 - 2007	Environmental Consultant, Nemai Consulting CC
2002 - 2005	Strata Control Officer, Impala Platinum Ltd

Management Experience

2005 - Current	Management of projects and project teams on environmental authorisation projects

Technical Experience

JC Pretorius is an Environmental Specialist with over 10 years' experience in the management of environmental authorisation projects and processes.

His experience includes, but is not limited to, Environmental Impact Assessments, Environmental Management Plans, Environmental Due Diligence and Feasibility Studies and Environmental Risk Assessments.

Since graduating in 2001 with a BSc Honours Degree in Environmental Management from the PU for CHE (Northwest University) he has gained experience in Environmental Consulting and the mining and minerals industry. Vast experience was gained in the mining, infrastructure, construction and residential sectors both nationally and internationally. Project experience included the management and conducting of Environmental Impact Assessments and implementation of Environmental Management Plans, facilitating Public-Private Partnerships, acting as Public Liaison, conducting Mining License Applications, Environmental Management Programmes, and NEMA Section 24G Rectifications, Water-Use Licensing, acting as Environmental Control Officer and Health and Safety Agent. All the above entailed liaising with clients, stakeholders and internal project teams and management of external consultants.

Managerial skills were developed whilst overseeing the regional offices of an environmental consultancy. Having worked on projects of national priority as well as on a smaller scale, he is comfortable in communicating and performing at all levels within the project environment.

2011 - Current **WorleyParsons RSA (Pty) Ltd**

Employed by WorleyParsons, further experience is being gained as Environmental Specialist in conducting of Environmental Impact Assessments, implementation of Environmental Management Plans, Integrated Waste Management Plan compilation and mining rights applications.

2009 - 2011 **Aurecon**

Experience was gained in conducting baseline environmental studies, construction

EMP compilation, water use licence applications, additional environmental authorizations, basic assessment authorization for the construction of contaminated water and potable water pipelines as well as EIA authorization and EMPR amendments for projects such as the Mokolo Crocodile Water Augmentation Project in the Limpopo Province, the Tau Tona Water Pipeline near Carletonville, the AEL potable water pipeline near Orkney and the raising of the Northern Boundary Dam wall at the Anglo Gold Ashanti West Wits Gold Mines.

2007 - 2009 **TWP-Environmental Services**

Experience included EIA authorisation for the construction and operation of a low-grade smelter at WLLG near Rustenburg and also for the construction and operation of an opencast nickel mine, concentrator plant and related infrastructure for the Selkirk Nickel Mine near Francistown, Botswana.

2005 - 2007 **Nemai Consulting CC**

Responsibilities included basic assessment authorization for projects such as the construction and operation of a cemetery for Marikana near Rustenburg, a paintball facility on an agricultural smallholding near Rustenburg, and a housing development on an agricultural holding near Hartebeespoort. EIA authorization was obtained for the construction and operation of two phases of a freeway between Phokeng and Sun City, a chicken manure processing plant and related infrastructure near Derby, a brick manufacturing facility and related infrastructure near Kathu as well as rectification of an illegal quad bike facility and illegal river diversion and alteration of a river bank in terms of NEMA Section 24G.

2002 - 2005 **Impala Platinum Ltd**

As Strata Control Officer, experience was acquired as fall of ground database co-ordinator, new technology implementation co-ordinator and in monitoring of support systems.

Courses, Conferences and Seminars

2008 Integrated Waste Management for Environmental Managers: Centre for Environmental Management, Northwest University

2008 Integrated Water Resource Management for Environmental Managers: Centre for Environmental Management, Northwest University

2006 OH&S Construction Regulations: Butterworths

2004 Blasting Certificate: Chamber of Mines

2003 Interpersonal Relations Course: Impala Platinum Limited

2002 New Managers Program: Wits Business School

2002 Safety Officer's Course: Chamber of Mines

Language Proficiency

	Speak	Read	Write
Afrikaans (Native)	Excellent	Excellent	Excellent
English (Fluent)	Excellent	Excellent	Excellent
Zulu (Conversational)	Fair	Fair	Fair

environmental affairs

Department:
Environmental Affairs
REPUBLIC OF SOUTH AFRICA

DETAILS OF EAP AND DECLARATION OF INTEREST

	(For official use only)
File Reference Number:	12/12/20/ or 12/9/11/L
NEAS Reference Number:	DEAT/
Date Received:	

Application for integrated environmental authorisation and waste management licence in terms of the-

(1) National Environmental Management Act, 1998 (Act No. 107 of 1998), as amended and the Environmental Impact Assessment Regulations, 2010; and

(2) National Environmental Management Act: Waste Act, 2008 (Act No. 59 of 2008) and Government Notice 718, 2009

PROJECT TITLE

Environmental Impact Assessment for the proposed Humansrus Solar Thermal Energy Power Plant on the Farm 469, the Hay Rd in the Northern Cape.

Environmental Assessment Practitioner (EAP):	WorleyParsons RSA Resources and Energy		
Contact person:	Leanna Rautenbach		
Postal address:	PO Box 36155 Menlo Park		
Postal code:	0102	Cell:	079 503 1323
Telephone:	0122 4256300	Fax:	012 460 9978
E-mail:	lrautenbach@kv3.co.za		
Professional affiliation(s) (if any)	IAIA SA member		

Project Consultant:	WorleyParsons RSA Resources and Energy		
Contact person:	Leanna Rautenbach		
Postal address:	PO Box 36155 Menlo Park		
Postal code:	0102	Cell:	079 503 1323

Telephone:	0122 4256300	Fax:	012 460 9978
E-mail:	lrautenbach@kv3.co.za		

4.2 The Environmental Assessment Practitioner

I, **Leanna Rautenbach** , declare that –

General declaration:

- I act as the independent environmental practitioner in this application;
- I will perform the work relating to the application in an objective manner, even if this results in views and findings that are not favourable to the applicant;
- I declare that there are no circumstances that may compromise my objectivity in performing such work;
- I have expertise in conducting environmental impact assessments, including knowledge of the Act, regulations and any guidelines that have relevance to the proposed activity;
- I will comply with the Act, Regulations and all other applicable legislation;
- I will take into account, to the extent possible, the matters listed in regulation **8** of the Regulations when preparing the application and any report relating to the application;
- I have no, and will not engage in, conflicting interests in the undertaking of the activity;
- I undertake to disclose to the applicant and the competent authority all material information in my possession that reasonably has or may have the potential of influencing - any decision to be taken with respect to the application by the competent authority; and - the objectivity of any report, plan or document to be prepared by myself for submission to the competent authority;
- I will ensure that information containing all relevant facts in respect of the application is distributed or made available to interested and affected parties and the public and that participation by interested and affected parties is facilitated in such a manner that all interested and affected parties will be provided with a reasonable opportunity to participate and to provide comments on documents that are produced to support the application;
- I will ensure that the comments of all interested and affected parties are considered and recorded in reports that are submitted to the competent authority in respect of the application, provided that comments that are made by interested and affected parties in respect of a final report that will be submitted to the competent authority may be attached to the report without further amendment to the report;
- I will keep a register of all interested and affected parties that participated in a public participation process;
- I will provide the competent authority with access to all information at my disposal regarding the application, whether such information is favourable to the applicant or not;
- all the particulars furnished by me in this form are true and correct;
- will perform all other obligations as expected from an environmental assessment practitioner in terms of the Regulations; and
- I realise that a false declaration is an offence in terms of regulation 71 and is punishable in terms of section 24F of the Act.

Disclosure of Vested Interest (**delete whichever is not applicable**)

- I do not have and will not have any vested interest (either business, financial, personal or other) in the proposed activity proceeding other than remuneration for work performed in terms of the Environmental Impact Assessment Regulations, 2010;

Signature of the environmental assessment practitioner:

Name of company: Watey Parsons RSA

Date: 06/06/2011

environmental affairs

Department:
Environmental Affairs
REPUBLIC OF SOUTH AFRICA

DETAILS OF EAP AND DECLARATION OF INTEREST

	(For official use only)
File Reference Number:	12/12/20/ or 12/9/11/L
NEAS Reference Number:	DEAT/
Date Received:	

Application for integrated environmental authorisation and waste management licence in terms of the-

(1) National Environmental Management Act, 1998 (Act No. 107 of 1998), as amended and the Environmental Impact Assessment Regulations, 2010; and

(2) National Environmental Management Act: Waste Act, 2008 (Act No. 59 of 2008) and Government Notice 718, 2009

PROJECT TITLE

Environmental Impact Assessment for the proposed Humansrus Solar Thermal Energy Power Plant on the Farm 469, the Hay Rd in the Northern Cape.

Environmental Assessment Practitioner (EAP):	BEAL Environmental Consulting		
Contact person:	Jeanne-Louise Liebenberg		
Postal address:	PO Box 71527 The Willows		
Postal code:	0041	Cell:	073 163 6409
Telephone:	012 807 5347	Fax:	086 537 5828
E-mail:	jl@beal.co.za		
Professional affiliation(s) (if any)			

Project Consultant:	WorleyParsons RSA Resources and Energy		
Contact person:	Leanna Rautenbach		
Postal address:	PO Box 36155 Menlo Park		
Postal code:	0102	Cell:	079 503 1323

4.2 The Environmental Assessment Practitioner

I, **Jeanne-Louise Liebenberg** , declare that –

General declaration:

- I act as the independent environmental practitioner in this application
- I will perform the work relating to the application in an objective manner, even if this results in views and findings that are not favourable to the applicant
- I declare that there are no circumstances that may compromise my objectivity in performing such work;
- I have expertise in conducting environmental impact assessments, including knowledge of the Act, regulations and any guidelines that have relevance to the proposed activity;
- I will comply with the Act, regulations and all other applicable legislation;
- I will take into account, to the extent possible, the matters listed in regulation **8** of the regulations when preparing the application and any report relating to the application;
- I have no, and will not engage in, conflicting interests in the undertaking of the activity;
- I undertake to disclose to the applicant and the competent authority all material information in my possession that reasonably has or may have the potential of influencing - any decision to be taken with respect to the application by the competent authority; and - the objectivity of any report, plan or document to be prepared by myself for submission to the competent authority;
- I will ensure that information containing all relevant facts in respect of the application is distributed or made available to interested and affected parties and the public and that participation by interested and affected parties is facilitated in such a manner that all interested and affected parties will be provided with a reasonable opportunity to participate and to provide comments on documents that are produced to support the application;
- I will ensure that the comments of all interested and affected parties are considered and recorded in reports that are submitted to the competent authority in respect of the application, provided that comments that are made by interested and affected parties in respect of a final report that will be submitted to the competent authority may be attached to the report without further amendment to the report;
- I will keep a register of all interested and affected parties that participated in a public participation process; and
- I will provide the competent authority with access to all information at my disposal regarding the application, whether such information is favourable to the applicant or not
- all the particulars furnished by me in this form are true and correct;
- will perform all other obligations as expected from an environmental assessment practitioner in terms of the Regulations; and
- I realise that a false declaration is an offence in terms of regulation 71 and is punishable in terms of section 24F of the Act.

Disclosure of Vested Interest (**delete whichever is not applicable**)

- I do not have and will not have any vested interest (either business, financial, personal or other) in the proposed activity proceeding other than remuneration for work performed in terms of the Environmental Impact Assessment Regulations, 2010;

- I have a vested interest in the proposed activity proceeding, such vested interest being:

_____

_____

_____

_____

_____

Signature of the environmental assessment practitioner:

BEAL Environmental Consulting

Name of company:

3 June 2011

Date: